TEMPERATURE SETTING

This mixer has been factory set under balanced pressure and hot water supply at 65°C.
If the mixed temperature is too hot or too cold it can be altered by following the below procedure:
1. Use a common household thermometer to test water temperature.
2. Remove the temperature handle (8) by prising off indice (10) and undoing grub screw (9).
3. Turn the cartridge spindle (3) clockwise or anticlockwise until desired temperature is reached, paying attention not to damage the broached part.
4. Re-fit the temperature handle (8), fix it using the grub screw (9), then place the indice (10). Pay attention that the lever (6) is pointing downwards.

SURFACE CLEANING

For surface cleaning of cover parts use water and soap only and dry with a soft cloth.
Any other cleaning product may damage the surface.

GUARANTEE

This product is covered by a 10 years guarantee from date of purchase for manufacturing faults.
The guarantee does not cover faults or damages caused by bad installation and/or maintenances, ordinary wear and tear, water composition i.e.:

- Incorrect installation, inversion of supply pipes;
- Pressure temperatures exceeding above limits;
- Improper manipulation, tampering, bad or missed maintenances;
- Foreign bodies and/or scale brought by water, ice, ordinary wear, water composition;
- Use of improper cleaning or maintenance product or substance.

NON COMPLIANCE WITH THE ABOVE INSTRUCTION WILL RENDER THE GUARANTEE INVALID

TO END USER:
PLEASE DO NOT THROW THIS INSTRUCTION NOTICE AWAY.
KEEP IT AS A MAINTENANCE GUIDE FOR KEEPING YOUR MIXER AS EFFICIENT AS IT IS NOW

NOTE
We have a policy of continuous improvement and reserve the right to change specification without notice

00851466 (14/03/14)

Thermostatic Shower Valve

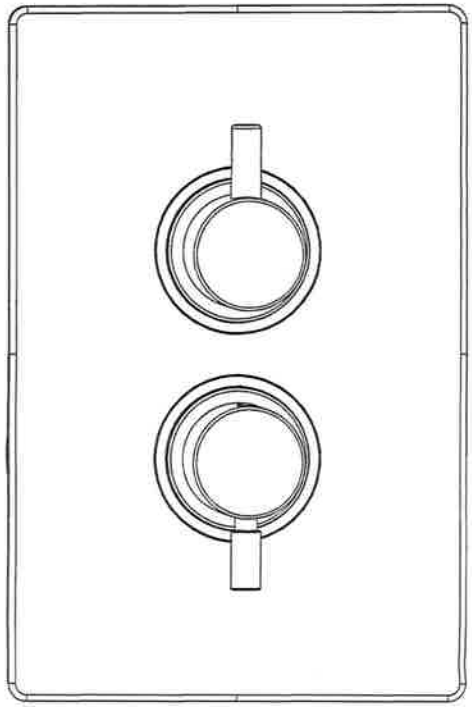

Installation Maintenance and Operation Instructions

OPERATION SPECIFICATION

Maximum cold supply: **25°C**
Maximum hot supply: **80°C**
Minimum hot supply: **10°C higher than maximum required mixer temperature**
Advisable hot supply: **55-65°C**
Minimum difference between hot and mixed temperature: **10°C**
Mixed water: **38°C** (can reach higher temperatures by depressing stop button)

Operating Pressure Criteria

	BS EN 1287 (low pressure)	BS EN 1111 (high pressure)
Pressure Range:	**0.1 bar - 1 bar**	**0.5 bar - 5 bar**
Max static:	**10 bar**	**10 bar**

Recommended working pressure 0.3 - 3 bar
Operating pressures (on hot and cold line) should be kept as balanced as possible, and from a common source, in order to ensure the maximum efficiency of the mixer. To reduce the flow rate, when the mixer is fitted to high pressure systems, fit the supplied green flow restrictors to reduce water consumption.
When pressures exceed 5 bar, installation of a pressure reducing valve is required.

HOT WATER SUPPLY

This mixer is suitable for any water heating system. In case of instantaneous heaters, hot water flow has to meet at least the minimum flow required by the heater to start and go on burning (see heater specifications). Instantaneous heaters of power equal to or higher than 18kW or 250mth/min are suitable. Generally, instantaneous water heaters having a lower power may not be suitable to work properly with any thermostatic mixer.
On gravity systems the minimum distance from the underside of the cold water storage tank to the shower head must be 1 metre.

PLUMBING & INSTALLATION

An independent water supply (both hot and cold) is required for the shower system.
Large runs of pipework will cause frictional loss of pressure. If more than one shower valve is installed ensure constant supply of hot and cold water can be maintained.
Hot water supply MUST always be on the LEFT inlet.
The mixer inlets are supplied with 1/2"BSP threads for 15mms copper pipe connection.

1. Shut down water supply.
2. Carefully purge pipework before commencing installation.
3. Decide correct position of the mixer (keeping hot inlet on the left and cold inlet on the right), drill holes and fit it with the supplied screws (21).
4. Fit the mixer to the copper pipes coming from the wall (hot supply to left inlet and cold supply to right inlet).
5. Turn supply back on and check for leaks.
6. Remove the temperature handle (8+7+6) assembly by prising off indice (10) and undoing grub screw (9) (in case you have a shower valve with handles instead of levers prise off the indice to undo the grub screw).
7. Remove the flow control handle (11) assembly by unscrewing lever (14) and undoing grub screw (12) (in case you have a shower valve with handles instead of levers prise off the indice to undo the grub screw).
8. Place the wall plate (18) complete with its washers over the shower valve body (1).
9. Re-fit handles assembly following the above procedure in the reverse order. Fit the temperature control handle on the cartridge paying attention not to move stop ring (5) and not to turn cartridge spindle (3).

OPERATION

In order to regulate the water flow, turn flow control handle (11): anticlockwise to turn on and increase the flow, clockwise to decrease and turn off.
In order to regulate the water temperature, turn temperature handle (8): clockwise to decrease the water temperature, anticlockwise to increase it. The mixer is factory set at 38°C; if you need to reach higher temperature, depress the button (6) and turn the handle anticlockwise.

MAINTENANCE

Through years of use impurities and limescale can restrict the flow of water through the mixer. If the mixer's performance deteriorates the filters or the cartridge may need to be cleaned or replaced.
In order to do this, please follow the following procedures:

FILTER CHANGE AND CLEANING

1. Shut down water supply to mixer.
2. Unscrew the connector assembly (composed of part no. 27, 26 and 25) from the mixer.
3. The filters (24) are located in the connection nut (25): carefully remove them.
4. Wash filters under running water or leave to soak in vinegar or de-scaling agent.
5. Refit the filters.
6. See paragraph "PLUMBING & INSTALLATION" for refitting valve.

CARTRIDGE CHANGE AND CLEANING

1. Shut down water supply to the mixer.
2. Prise off indice (10), undo grub screw (9) and pull the handle from the mixer body.
3. Remove the stop ring (5) and the shroud (2).
4. Unscrew and remove the cartridge (3) from mixer being careful not to damage the seals. Wash the cartridge under running water or leave to soak in vinegar or de-scaling agent.
5. Before refitting the cartridge, clean the mixer housing and grease the cartridge orings.
6. Re-fit the cartridge and tighten it at 10-11 Nm.
7. Turn the water supply back on. Measure water temperature with a thermometer.
8. Re-fit the shroud (2).
9. Re-fit the stop ring (5) in the same position as shown in the exploded drawing.
10. Re-fit the temperature handle (8), by fixing it by means of the grub screw (9), then place the indice (10). Pay attention that the lever (6) is pointing downwards.

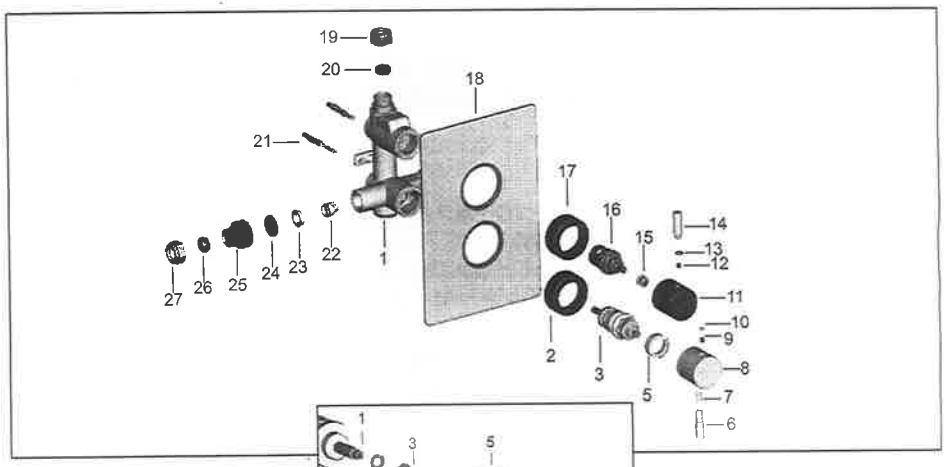
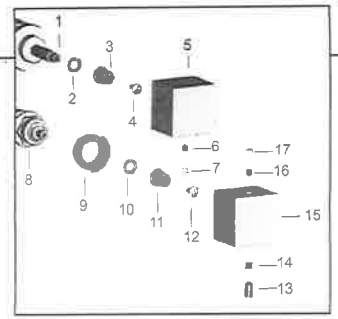
In case your thermostatic shower mixer has a square handle/lever please refer to this drawing.