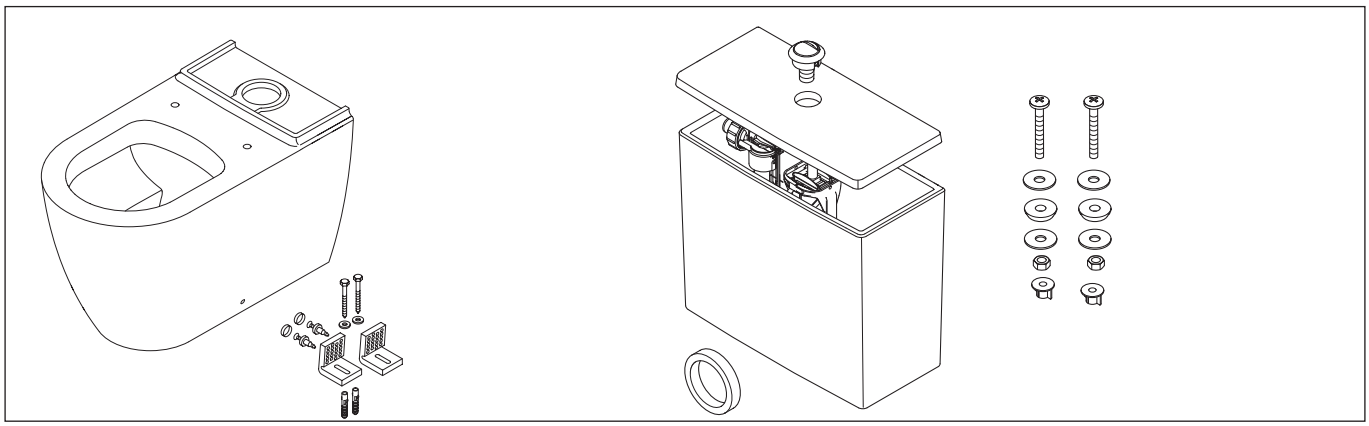

1

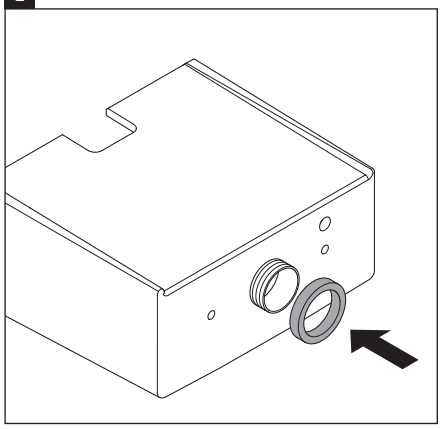

2

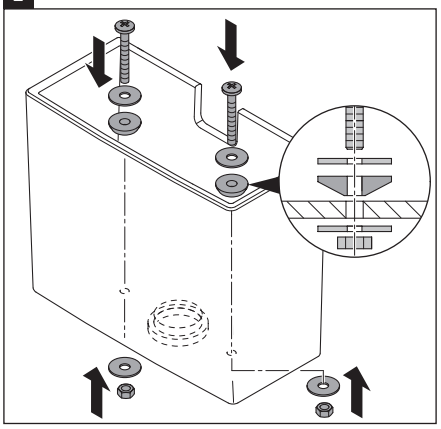

3

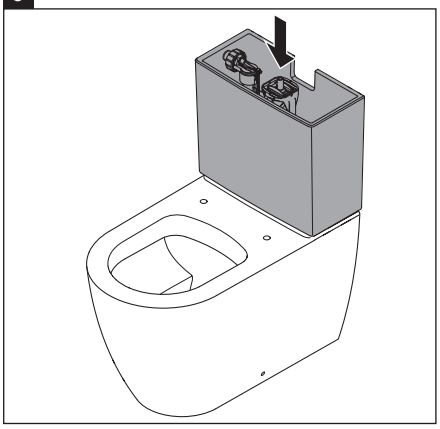

4

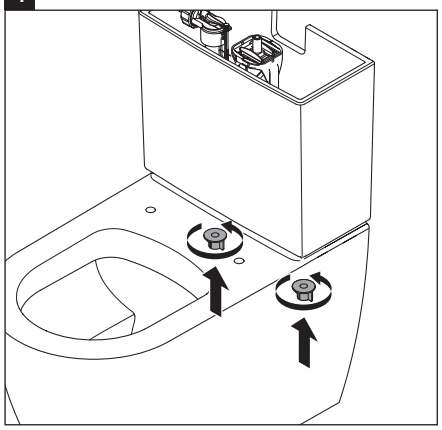

5

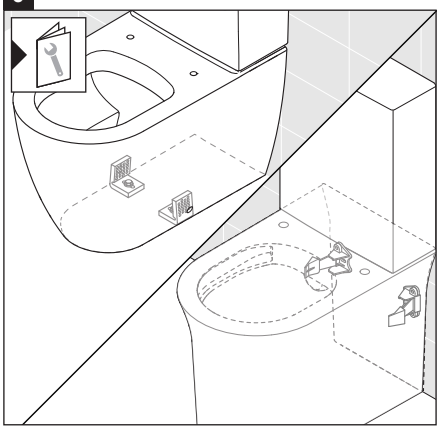

6

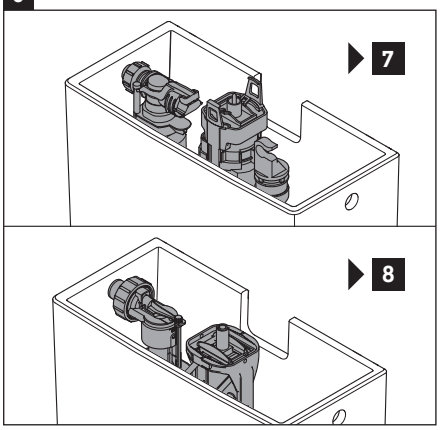


7

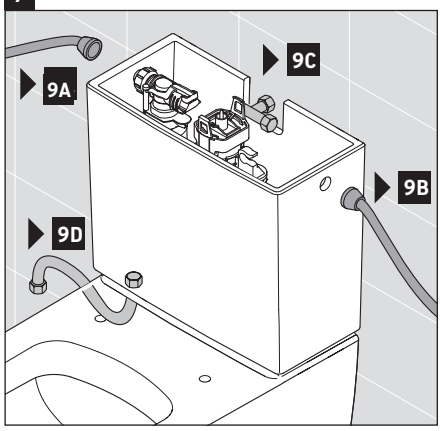


8

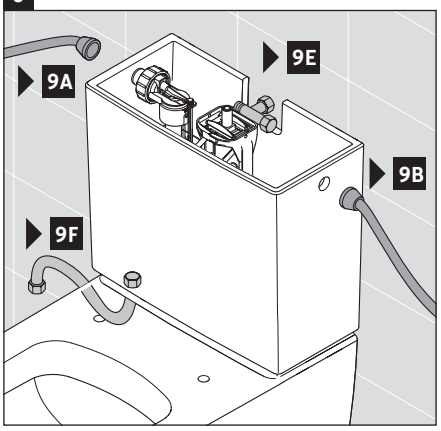


9A

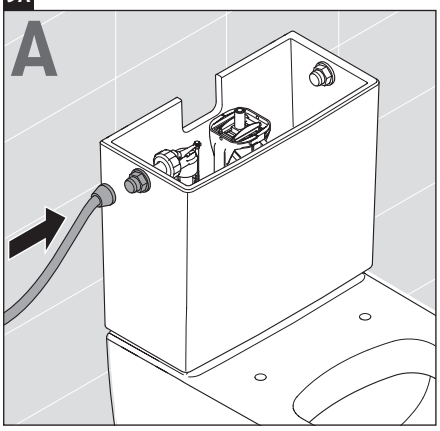

9B

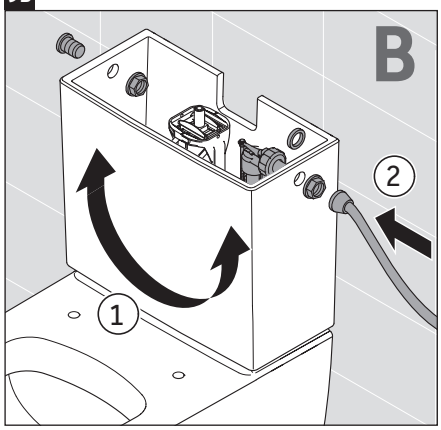


9C

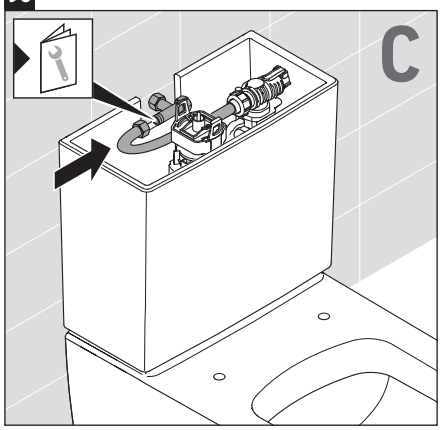


9D

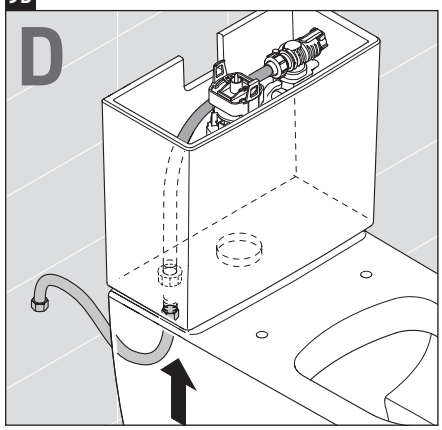


9E

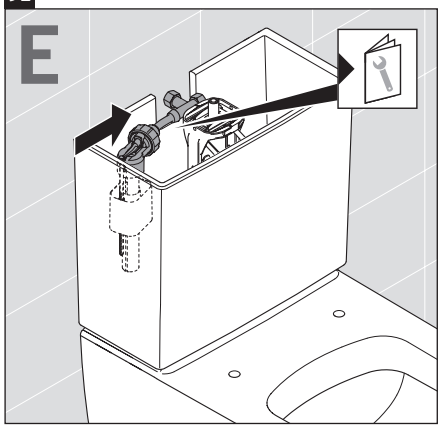


9F

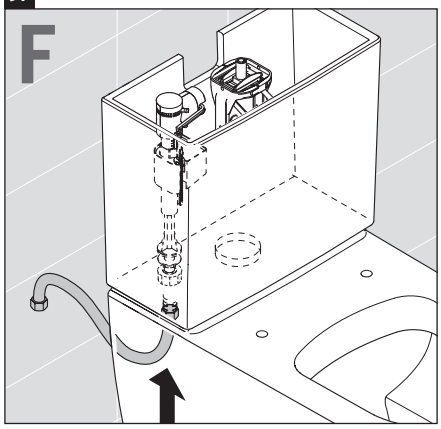


10

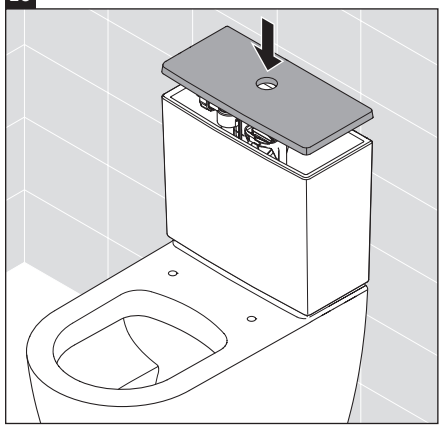

11

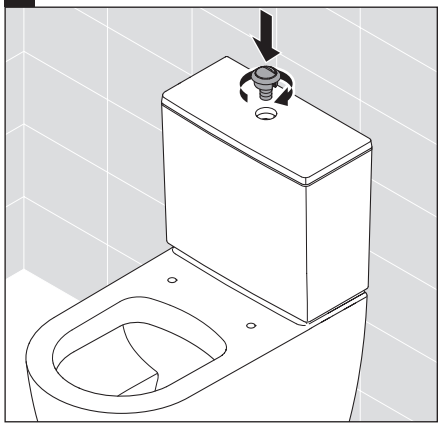

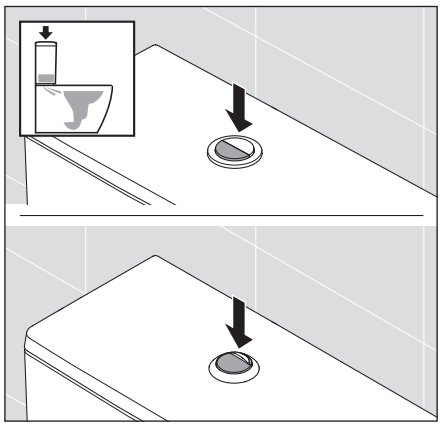

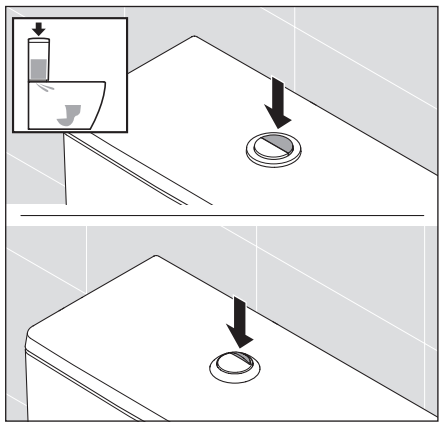

57085
Order no.: 70000866_23.01.7 - We reserve the right to make technical improvments and design modifications to the products illustrated.

**DURAVIT AG**, Werderstr. 36, 78132 Hornberg, Germany, Phone +49 78 33 700, Fax +49 78 33 70 289, info@duravit.de, www.duravit.de