CERAPLAN

Ideal Standard

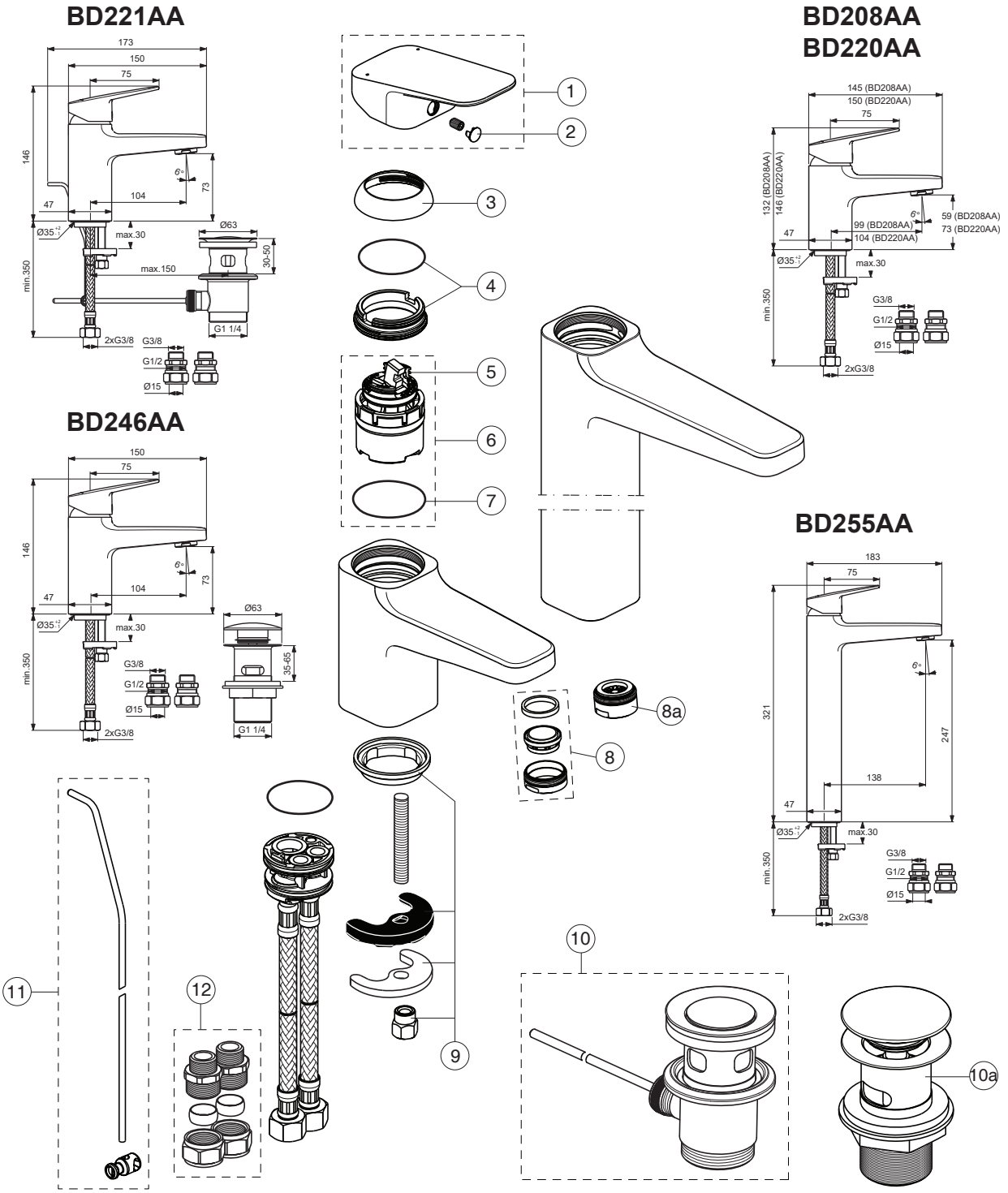

Pos.	Signify	Spare parts-Nr.	Quantity	Pos.	Signify	Spare parts-Nr.	Quantity
1	Lever,w/logo	B961716AA	1 Set				
2	Cap decorative	B960473AA	1 Pcs.				
3	Rosette M38x1.5	B961438AA	1 Pcs.				
4	Screw M41x1.5/M38x1.5	B961374NU	1 Set				
5	Hot limit stop	A861181NU	1 Pcs.				
6	Cartridge Ø38mm	A861156NU*	1 Pcs.				
7	O-Ring Ø38x2.5	E960059NU*	1 Set				
8	Perlator M24x1-A - 5l/min	B961383AA	1 Pcs.				
8a	Nozzle	A961625AA**	1 Pcs.				
9	Connecting set	A964520NU	1 Set				
10	Pop-up drain ass.	A962991AA	1 Pcs.				
10a	Click waste slotted	S8803AA	1 Pcs.				
11	Pull-up rod-compl.	B960900AA	1 Set				
12	Connector G3/8,Ø15-set	B960845NU	1 Set				

*** for BD220AA , BD221AA , BD246AA , BD255AA*

**Universal set (not all parts needed)*

03.2021