Technical Data Sheet

ROUND COUNTERTOP BASIN BLACK

What's in the box: 1x DC12050

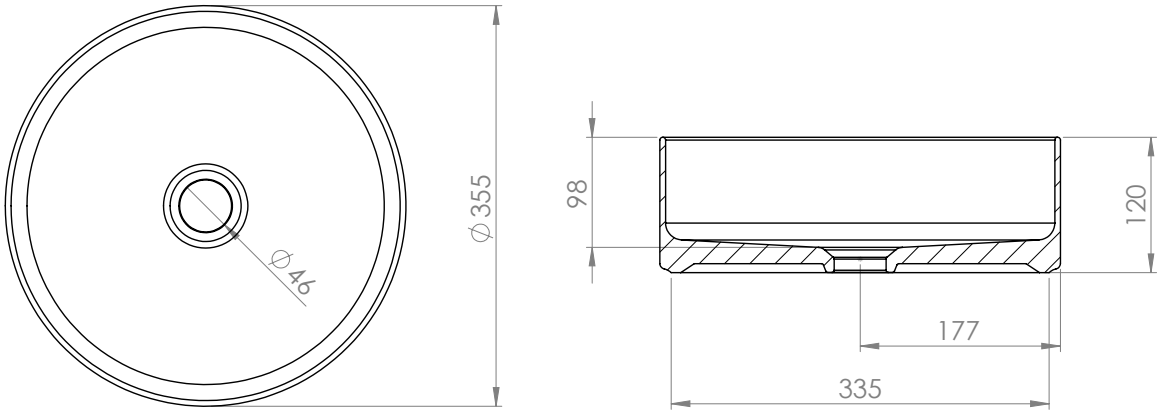

Diagrams not to scale
All dimensions in mm
Tolerance of +/-5mm

Materials

Basin: Ceramic

**Dimensions are subject to change, customers are advised to measure actual product before commencing installation.
*** BASIN HAS NO OVERFLOW SO MUST BE USED WITH AN OPEN WASTE

FAQs

Q: What is the maximum water depth of the basin?

A: Measurement not applicable. Since this basin does not have an overflow channel it should only be used with an open waste.

Q: Can this basin be wall mounted?

A. No.

Q: What are the taphole/ basin waste sizes?

A: All sizes are to British Standard - (BS EN 31)

- Diameter of the central tap hole = 35mm : +2/ -1mm
- Bore of the waste outlet hole = 46mm : +2 / - 3mm

Q: Where should the basin be located on the worktop?

A: We recommend it being centralised on the worktop left to right. Front to back should be set based on desired tap location and waste outlet.

Q: What ranges can this basin be used on?

Furniture units compatibility

Cadence					Compass		Acumen		
500	600	800	1000	1200	500	600	500	600	800
Yes	Yes	Yes	Yes	Yes	Yes	Yes	Yes	Yes	Yes