TECHNICAL DATA SHEET

ROXOR

CERAMICS

Sales Code: BU18132

Description: Sgl Bowl Ledge C/W 795X460x220

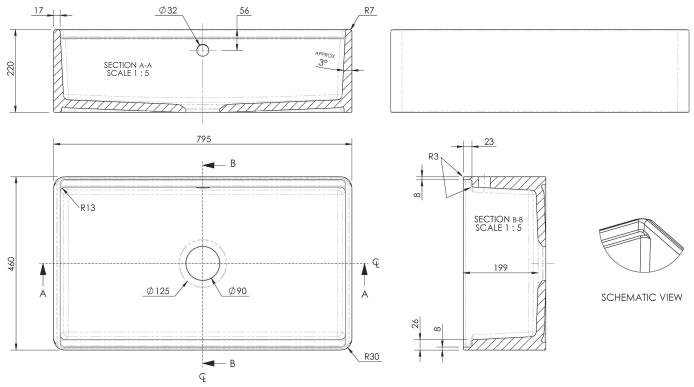

Product Dimensions	
Height (mm):	220
Width (mm):	795
Depth (mm):	460
Nett Weight (kg):	39.3
Packaging Dimensions	
Height (mm):	230
Width (mm):	825
Depth (mm):	480
Gross Weight (kg):	39.8
Packaging Data	
Box Colour:	Brown Cardboard Box
Box Qty:	1
Label Size:	100 x 50
Label Colour:	White Label
Label Qty:	2
Outer Box Dimensions (If Applicable)	
Height (mm):	
Width (mm):	
Depth (mm):	
Gross Weight (kg):	
Barcode:	5056678471388
Product Details	
Country of Origin:	Utd.Arab.Emir.
Fitting Instruction:	No
Certification: CE & UKCA:	WRAS: WRAS No:
Product Material:	
Fixing Supplied:	

Pans/Bidets:	Trap Style:	Includes Seat:

Seats:	Seat Type:	Material:
	Function:	Hinge Type:
	Hinge Material:	

Cisterns:	Operating Type:	Fittings:
	Lever Type:	

Basins:	Tap Hole:	Chain Stay Hole:
	Template:	Waste Type Req:
	Overflow Inc:	Overflow Cover:
	Inner Bowl Depth (mm): 198	