Ideal Standard

CONNECT 2 QUADRANT
CONNECT 2 OFFSET QUADRANT

UK version

MANUAL FOR USE, INSTALLATION and MAINTENANCE

IT - EVITARE L'IMPATTO CON GLI ANGOLI DELLA PARETE VETRATA. QUESTO PUÒ PROVOCARNE LA FRAMMENTAZIONE IMMEDIATA O IN UN MOMENTO SUCCESSIVO
UK - AVOID IMPACT WITH THE CORNERS OF THE GLASS THIS MAY CAUSE IMMEDIATE OR DELAYED SHATTERING
FR - EVITER TOUT CHOC SUR LES ANGLES DE LA PAROI - CELA POURRAIT ENTRAINER UN BRIS DE GLACE INSTANTANÉ OU DIFFÉRÉ DANS LE TEMPS
DE - ANSTOßEN BILDSCHIRMS VERMEIDEN, DA DIES ZU UNMITTELBARER ODER SPÄTERER BESCHÄDIGUNG FÜHREN KANN
ES - EVITAR GOLPES EN LOS CANTOS. ESTOS GOLPES PODRÍAN CAUSAR ROTURAS INMEDIATAS O CON EFECTO POSTERIOR
NL - VERMIJD IEDER CONTACT MET DE HOEKEN VAN HET GLAZEN PANEEL, DIT KAN DIRECT OF NA VERLOOP VAN TIJD TOT BESCHADIGING LEIDEN
GR - ΑΠΟΦΥΓΕΤΕ ΧΤΥΠΗΜΑΤΑ ΣΤΙΣ ΓΩΝΙΕΣ ΤΟΥ ΓΥΑΛΙΟΥ, ΑΥΤΟ ΜΠΟΡΕΙ ΝΑ ΠΡΟΚΑΛΕΣΕΙ ΘΡΥΜΜΑΤΙΣΜΟ ΑΜΕΣΑ Η ΑΡΓΟΤΕΡΑ
РУС - ИЗБЕГАЙТЕ УДАРОВ С УГЛАМИ ЭКРАНА, ЭТО МОЖЕТ СТАТЬ ПРИЧИНОЙ НЕМЕДЛЕННОГО ИЛИ ОТЛОЖЕННОГО ОБРАЗОВАНИЯ ТРЕЩИН
CZ - VYVARUJTE SE NÁRAZU ROHŮ SKLA NA TVRDÝ POVRCH – MŮŽE DOJÍT K OKAMŽITÉMU NEBO POZDĚJŠÍMU ROZTŘÍŠTĚNÍ SKLA
SK - VYVARUJTE SA NÁRAZU ROHOV SKLA NA TVRDÝ POVRCH - MÔŽE DÔJSŤ K OKAMŽITÉMU ALEBO NESKORŠIEMU ROZTRIEŠTENIE SKLA
SLO - IZOGNITE SE UDARCEV NA ROBOVIH, KER STEKLO SE LAHKO TAKOJ ALI NAKNADNO RAZBIJE
HR - IZBJEGAVAJTE UDARCE KUTEVIMA STAKLENOG ZASLONA JER MOGU UZROKOVATI TRENUTACNI LOM ILI NAKNADNA PUKNUCA
BG - ДА СЕ ИЗБЯГВАТ УДАРИ В ЪГЛИТЕ НА СТЪКЛОТО, ЗАЩОТО ТОВА МОЖЕ ДА ДОВЕДЕ ДО НЕЗАБАВНО ИЛИ ОТЛОЖЕНО ВЪВ ВРЕМЕТО НАПУКВАНЕ

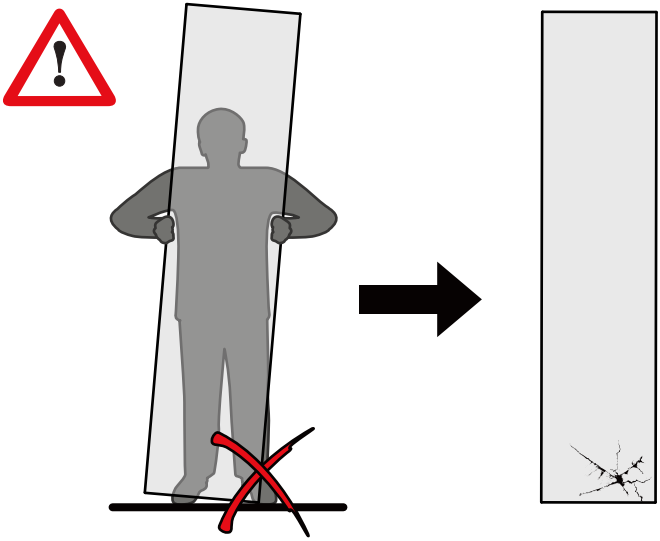

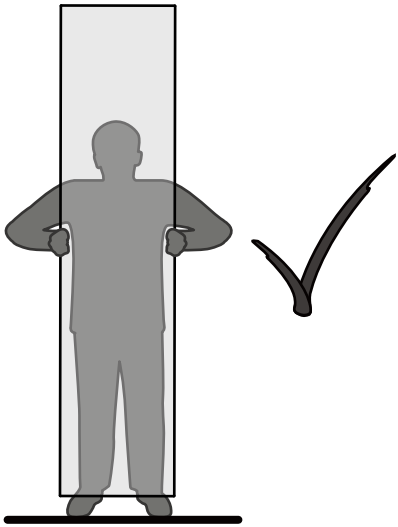

Notes on this manual

Partial or total reproduction or copying of this manual without the permission of the manufacturer is prohibited. The contents of this manual are subject to change with no advance notice. Every effort has been made in preparing this manual to ensure the accuracy of its contents. However, if you have any questions or discover any errors, please contact the manufacturer. The manufacturer shall not be held liable for consequences arising from use of the product. The drawings and diagrams contained in the manual are to be considered approximate and are provided only for information

SALES RULES AND REGULATIONS

The manufacture recommends carefully reading this booklet

- The manual is provided together with the product and must be kept for future consultation during the entire life of the product and must be transferred to any product owner or installer.
- The product must be installed without many any modifications, under penalty of warranty cancellation. The assembly procedures, tools and materials that are indicated must be respected.
- The product was designed and built for installation on a masonry wall: if installed on another type of wall (ex. plasterboard, wood, etc.), the installer is responsible for providing reinforcement to ensure the secure installation of the product.
- For silicon sealing, use acetic silicon.

When installation is complete, remove all packaging items and installation waste according to the current regulations of the country of product use.

ROUTINE MAINTENANCE OF SHOWER ENCLOSURE AND VISIBLE PARTS

Lime scale and aggressive detergents may make the surface of the shower enclosure opaque over time.
The Manufacturer suggests the following:
Never use powder detergents. Liquid detergents may be used if they are free of alcoholic substances.
Never use products such as ammonia, acetone, alcohol and the like because they may permanently damage the shower enclosure.
After use, your shower should be cleaned with soap and water. This is particularly important in hard water districts where insoluable lime salts may be deposited and allowed to build up.
Cleaners of a gritty or abrasive nature should not be used. Care should be taken to avoid contact with strong chemicals such as organic solvents and strippers.
Glass cleaners can be used but with caution, if in doubt, contact the manufacturer of the cleaner in question.
Please keep these instructions for aftercare and customer service details.

GUIDE TO INSTRUCTIONS

1 — Installation PHASE

1 2 — sequence of the OPERATIONS to be performed during a PHASE

PR2 — component identification

CONNECT 2 QUADRANT

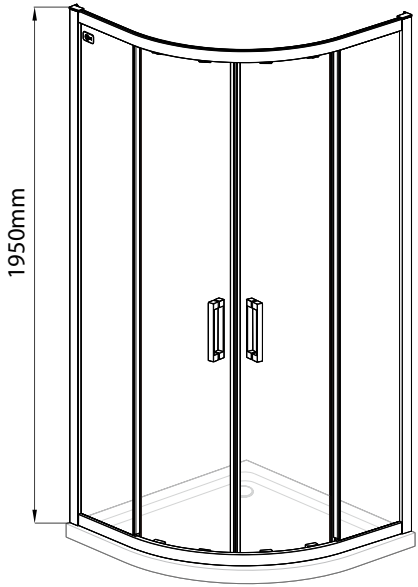

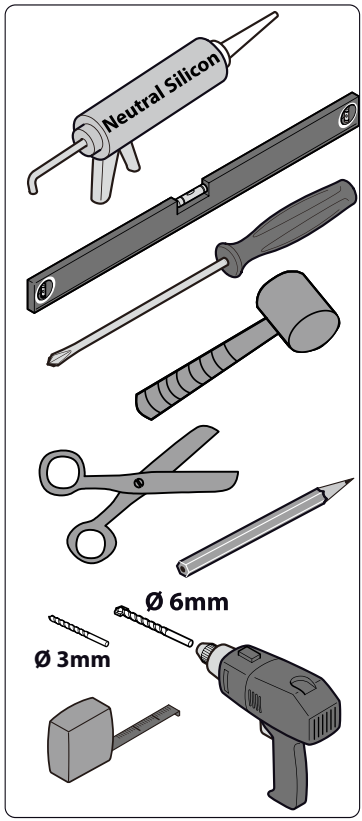

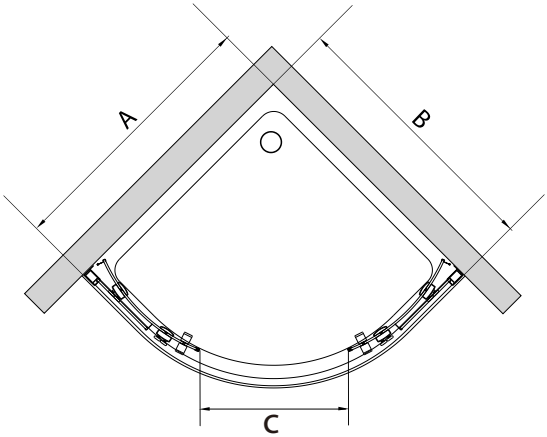

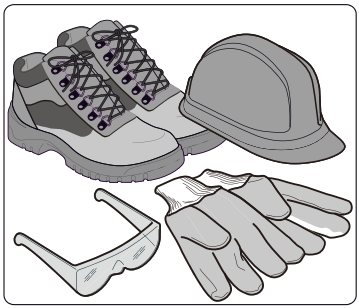

	A(mm)	B(mm)	C(mm)
QUADRANT 800x800	755-780	755-780	400
QUADRANT 900x900	855-880	855-880	525

CONNECT 2 OFFSET QUADRANT

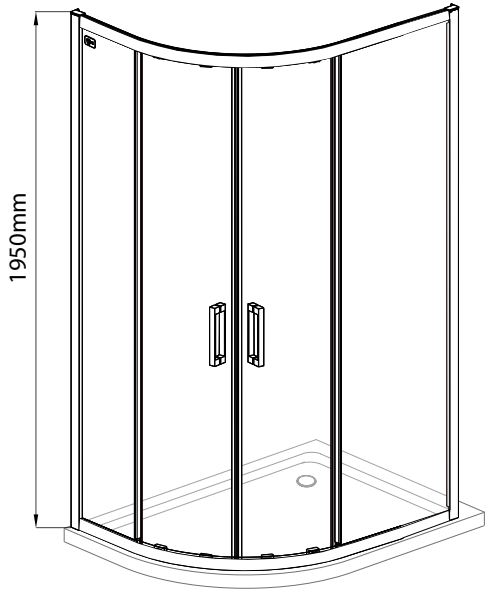

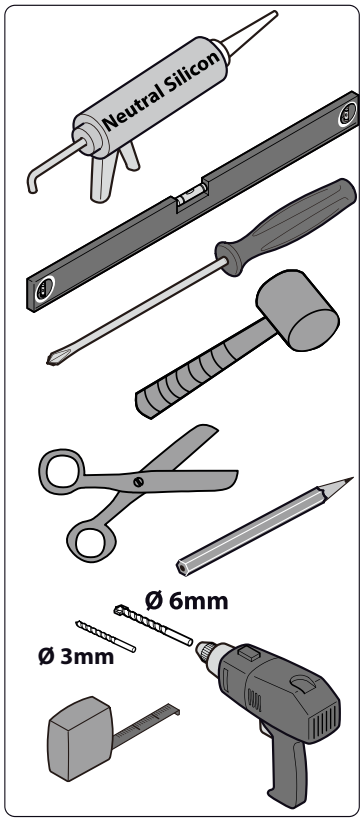

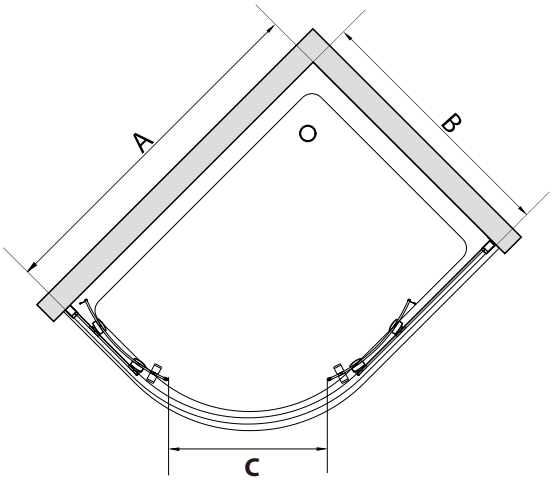

	A(mm)	B(mm)	C(mm)
OFFSET QUADRANT 900x760	855-880	715-740	430
OFFSET QUADRANT 1000x800	955-980	755-780	465
OFFSET QUADRANT 1200x800	1155-1180	755-780	465
OFFSET QUADRANT 1200x900	1155-1180	855-880	525

Components

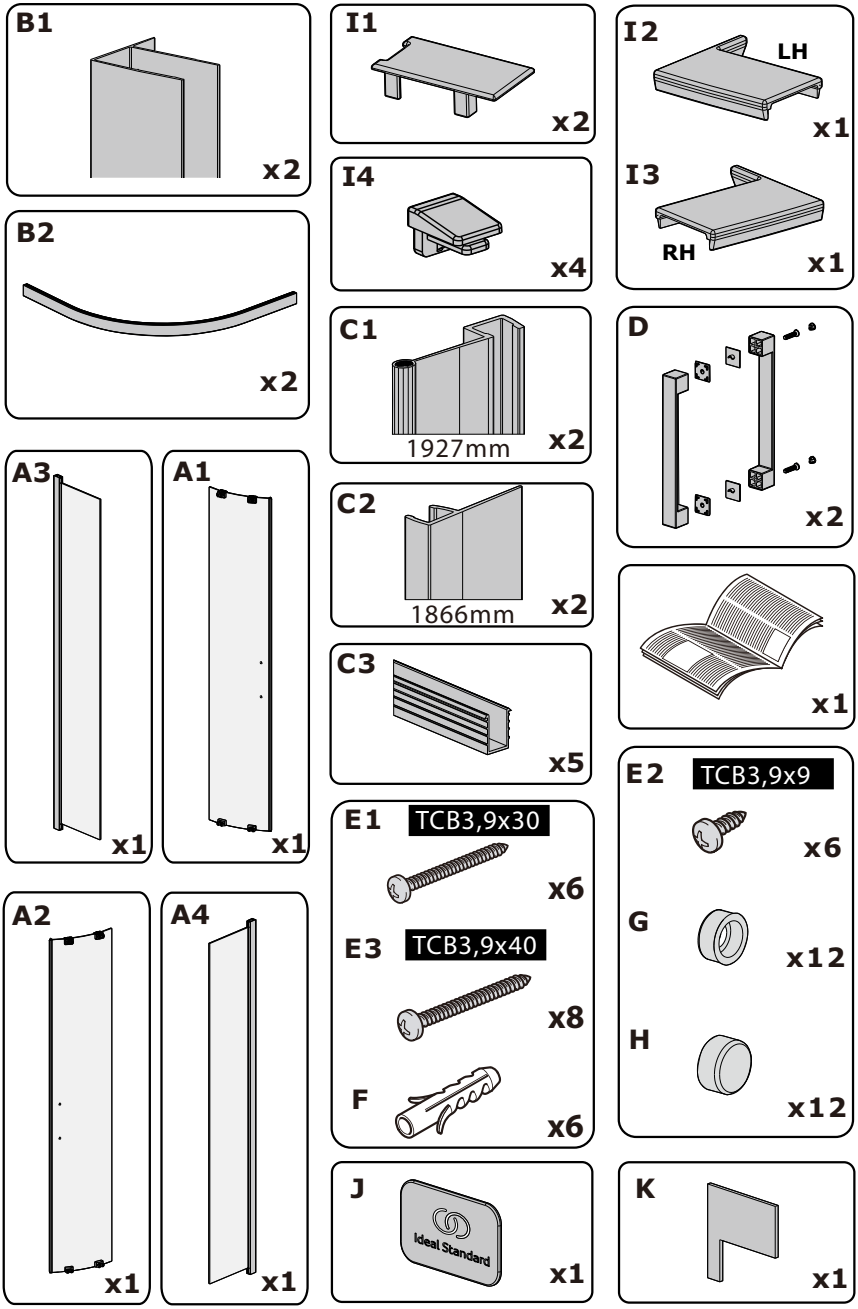
B1
x2
B2
x2
A3
x1
A1
x1
A2
x1
A4
x1
I1
x2
I4
x4
C1
1927mm
x2
C2
1866mm
x2
C3
x5
E1
TCB3,9x30
x6
E3
TCB3,9x40
x8
F
x6
J
Ideal Standard
x1
I2
LH
x1
I3
RH
x1
D
x2
x1
E2
TCB3,9x9
x6
G
x12
H
x12
K
x1

ATTENTION!

- Ensure tray is level and firm
- Tray MUST be sealed before enclosure installation begins
- It is recommended that shower enclosures are fitted onto a tiled wall surface.
- Wall fixing supplied are for solid wall construction
- Substitute suitable fixing as appropriate
- Door is not handed

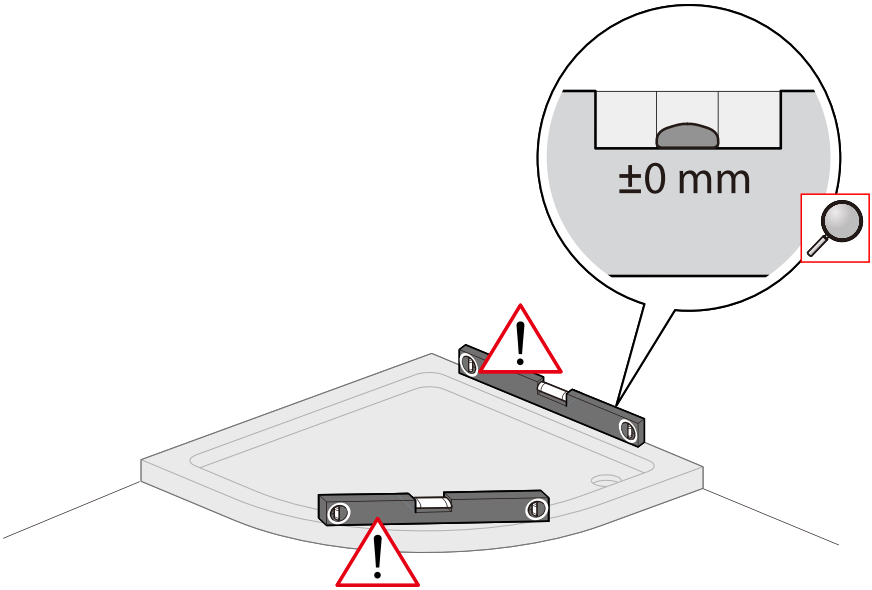

2

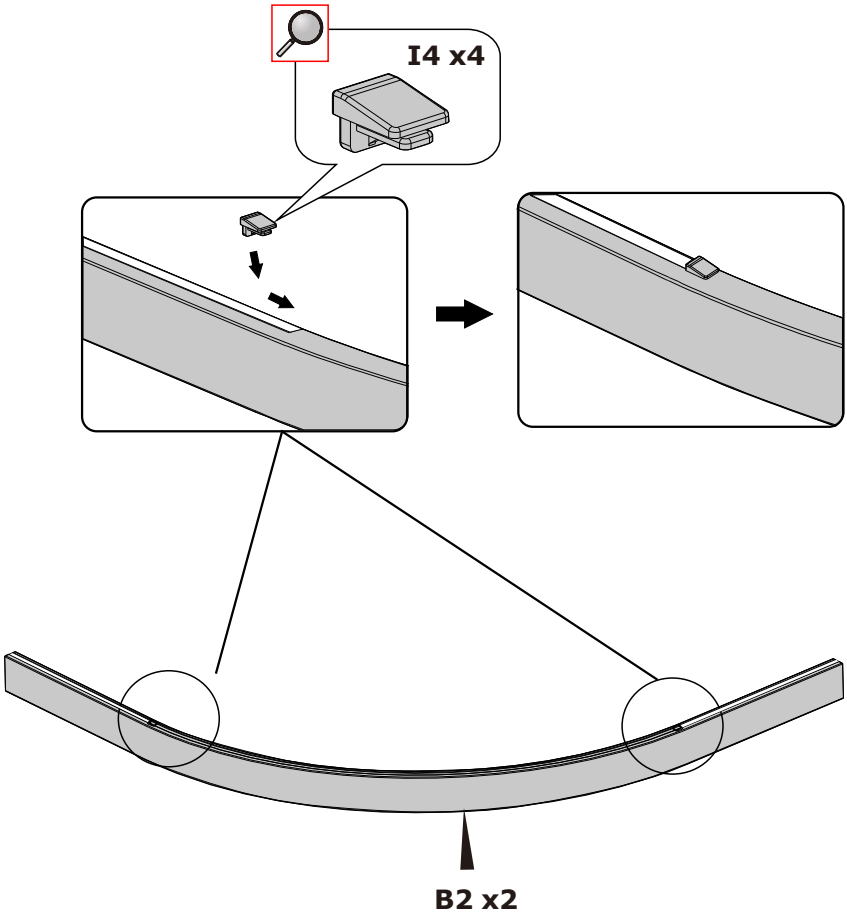

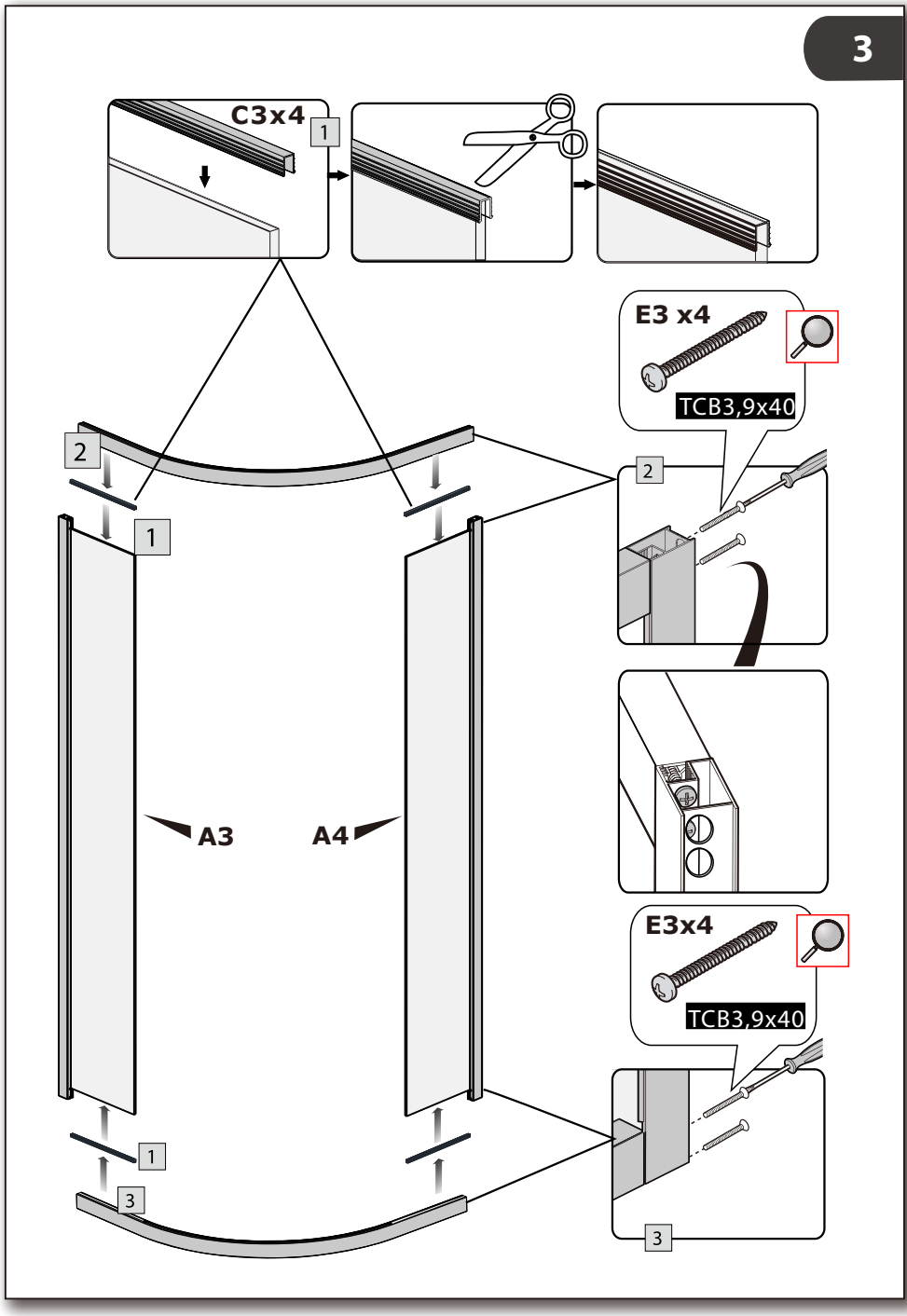
C3x4
1
E3 x4
TCB3,9x40
2
2
1
A3
A4
E3x4
TCB3,9x40
1
3
3

4

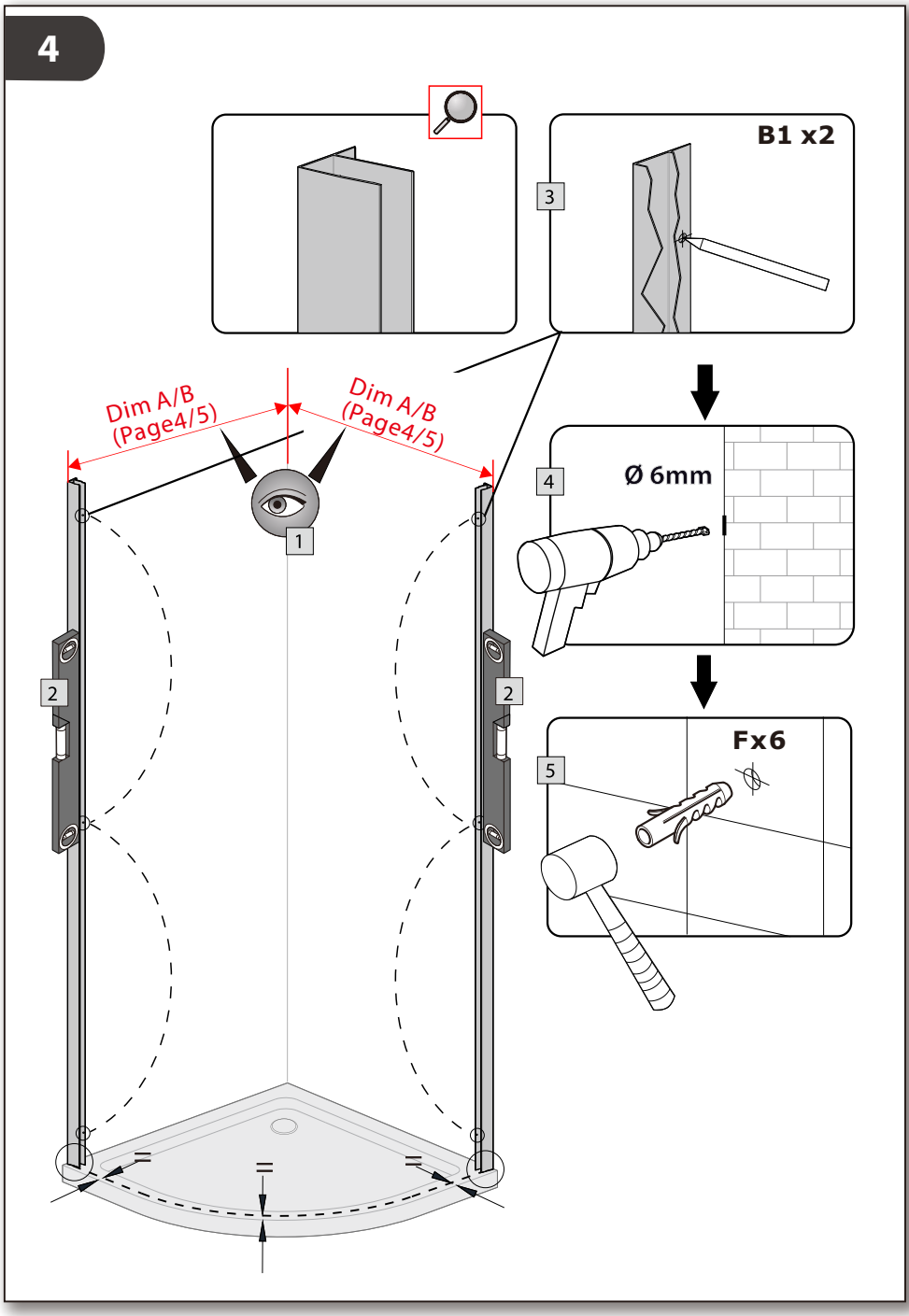

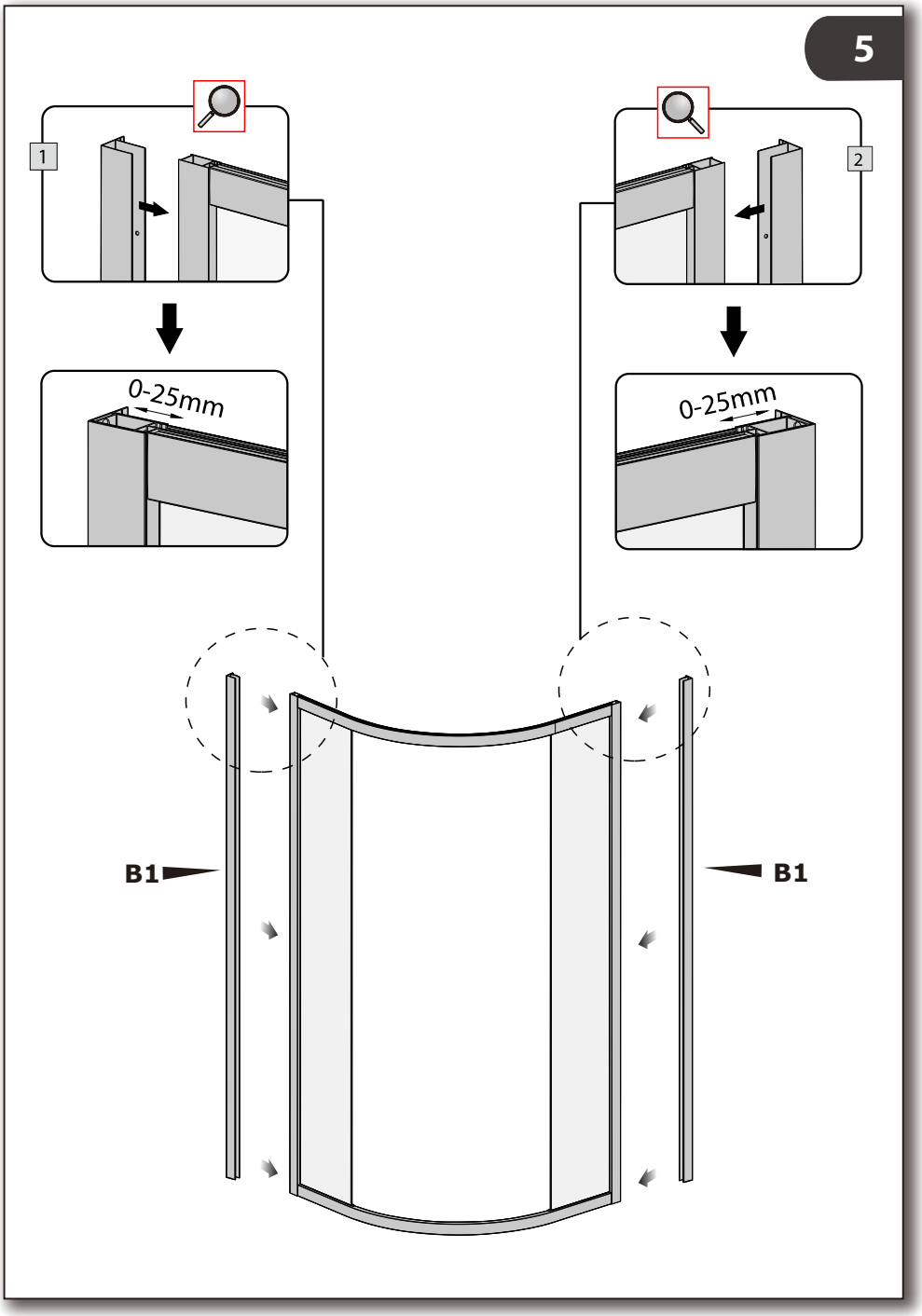
5
1
2
0-25mm
0-25mm
B1
B1

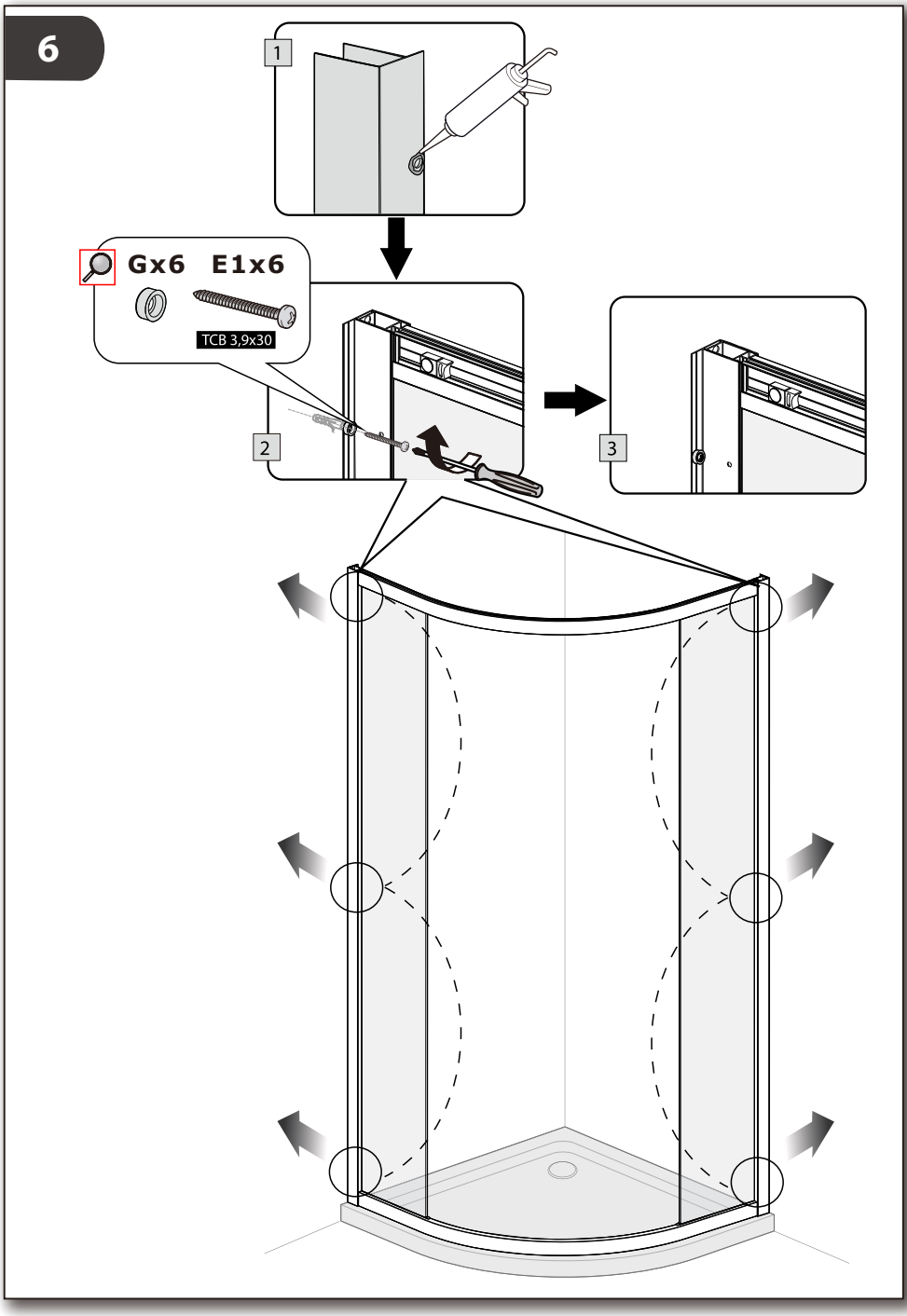
6
1
Gx6
E1x6
TCB 3,9x30
2
3

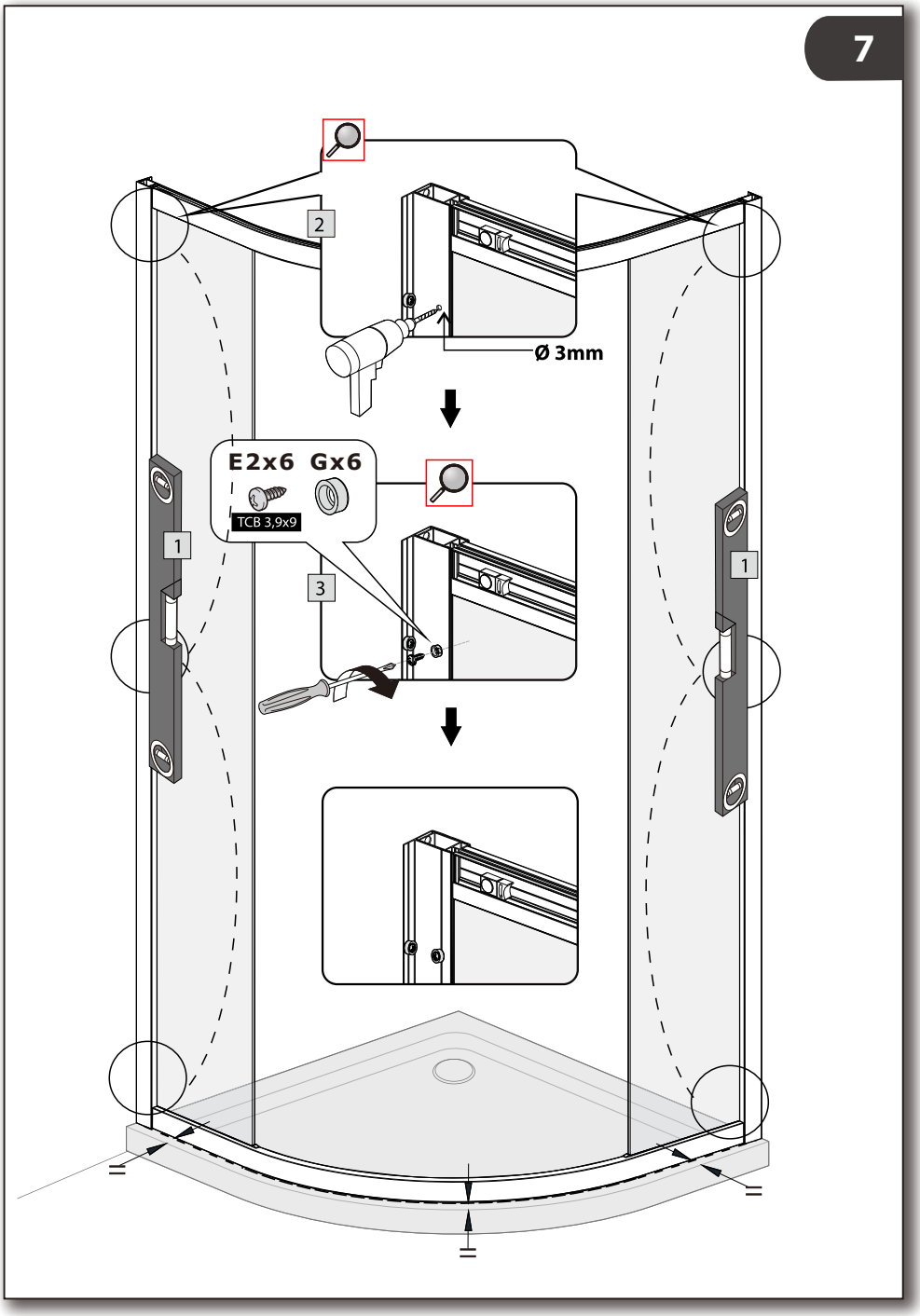
2
Ø 3mm
E2x6
Gx6
TCB 3,9x9
1
3
1

8

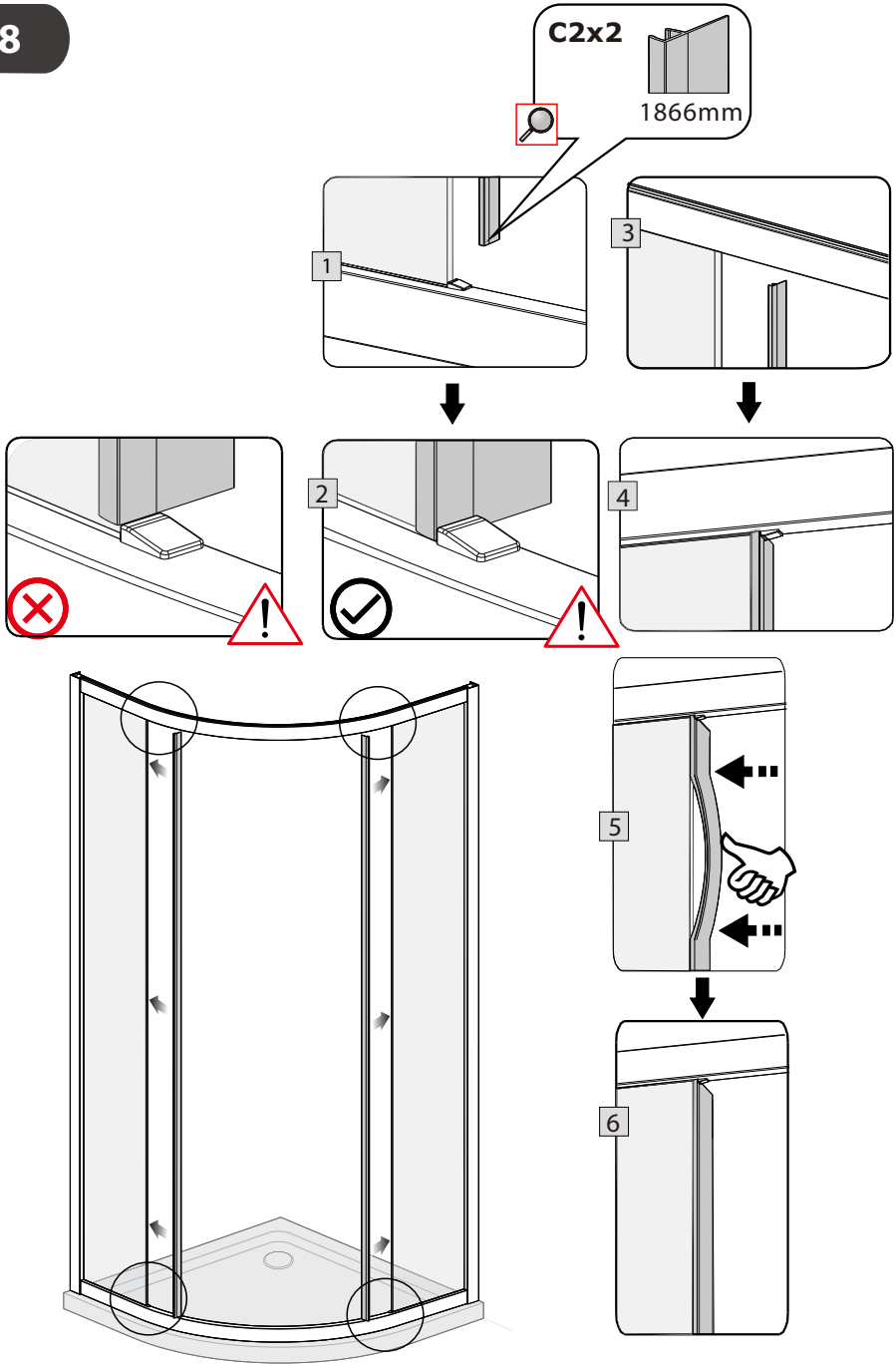

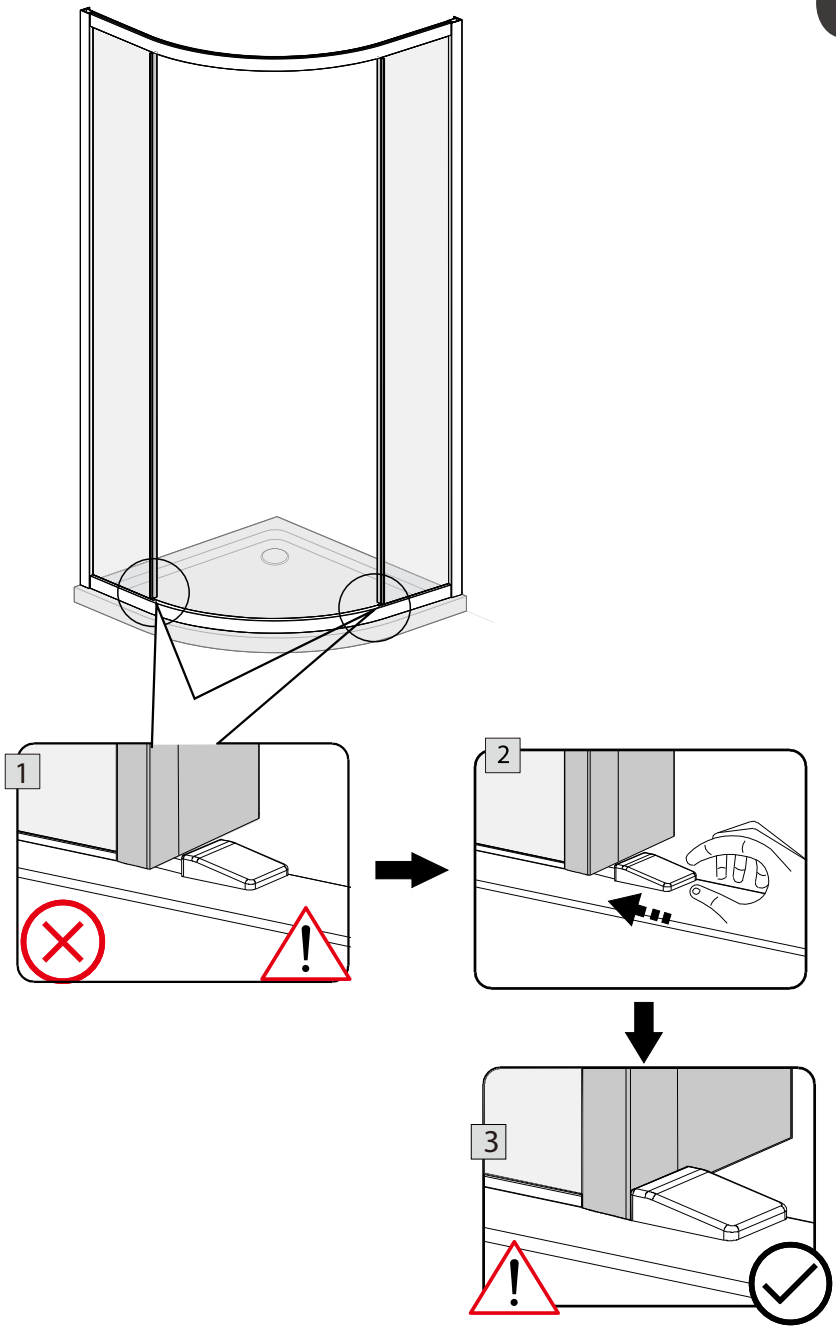
1
2
3

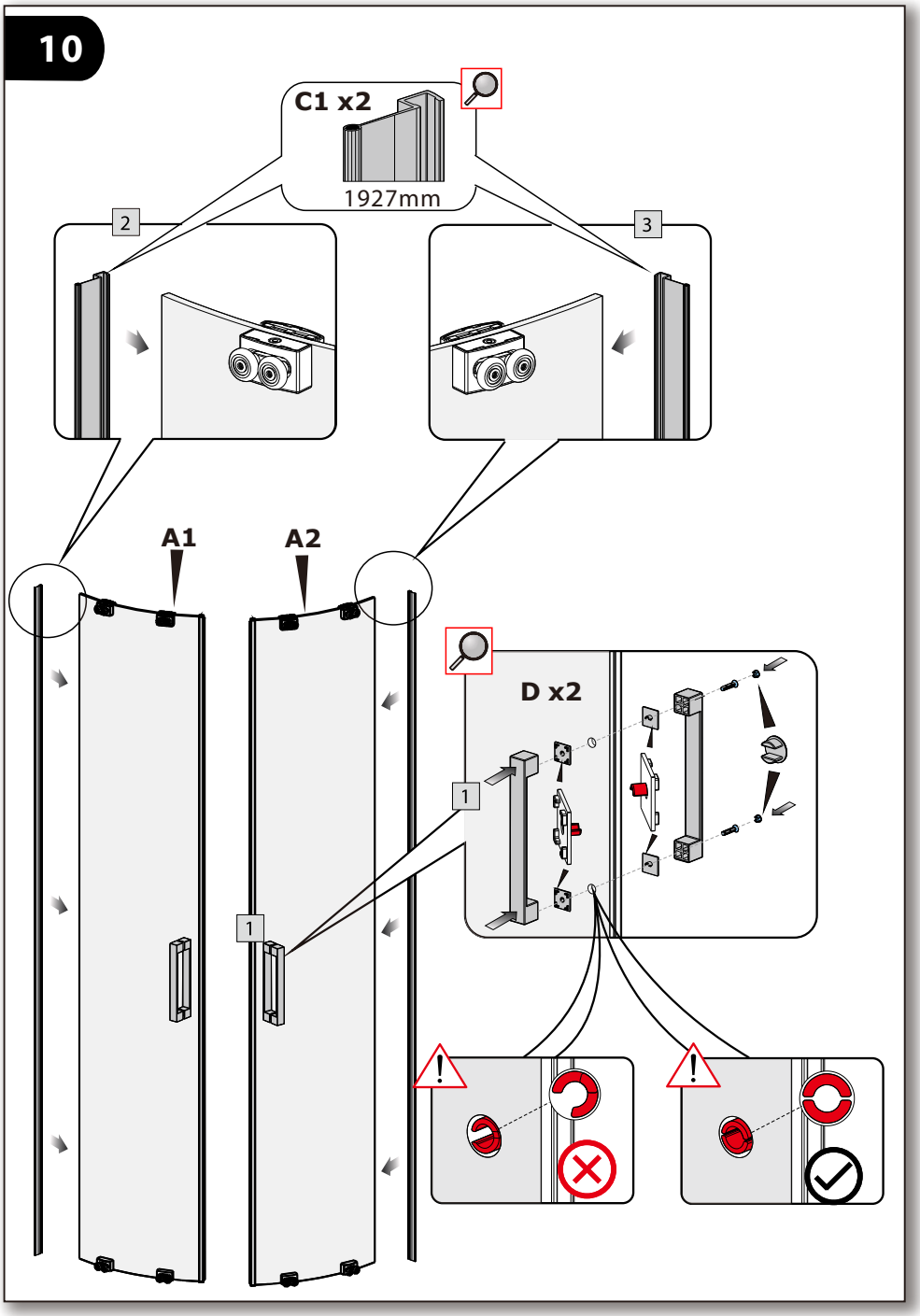
10
C1 x2
1927mm
2
3
A1
A2
D x2
1
1

ENSURE TOP WHEELS ARE ALIGNED

11

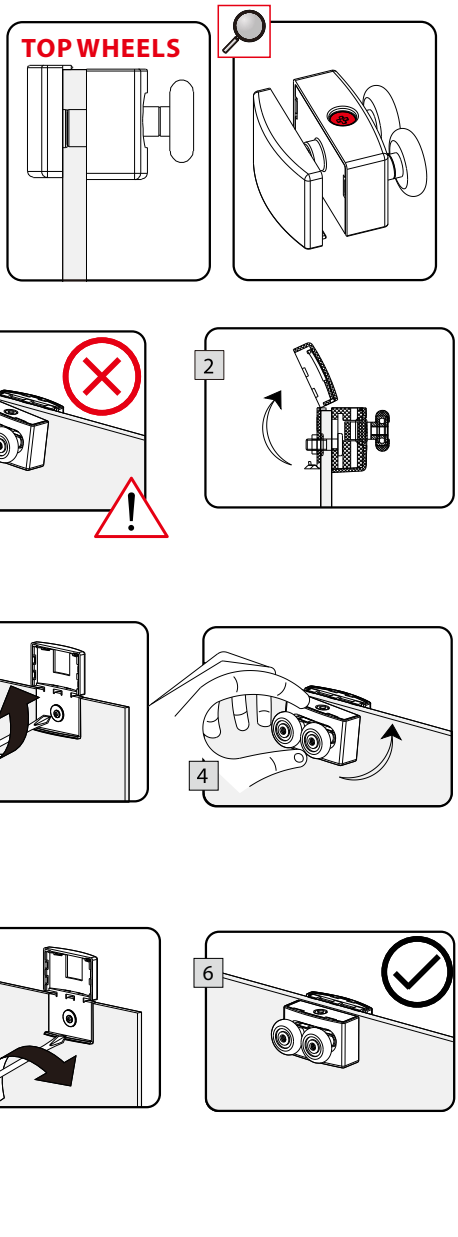

12 ENSURE BOTTOM WHEELS ARE ALIGNED

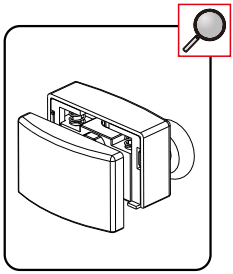

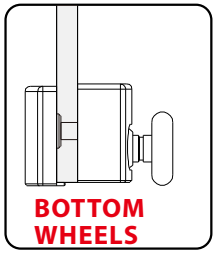

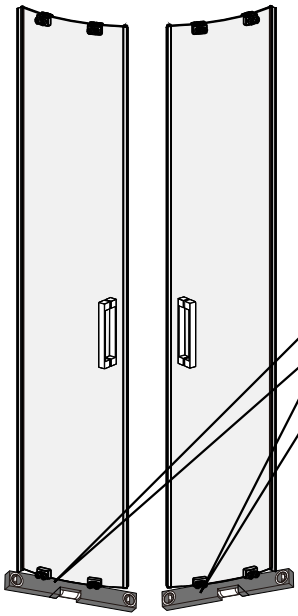

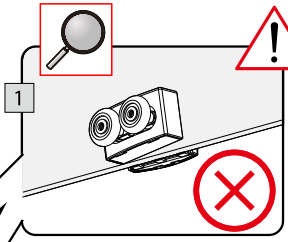

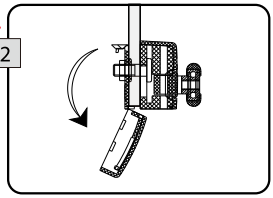

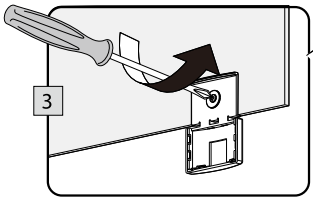

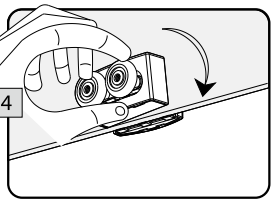

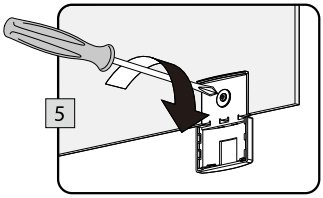

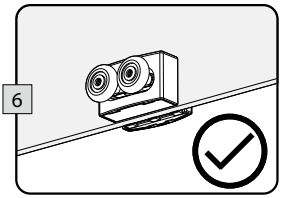

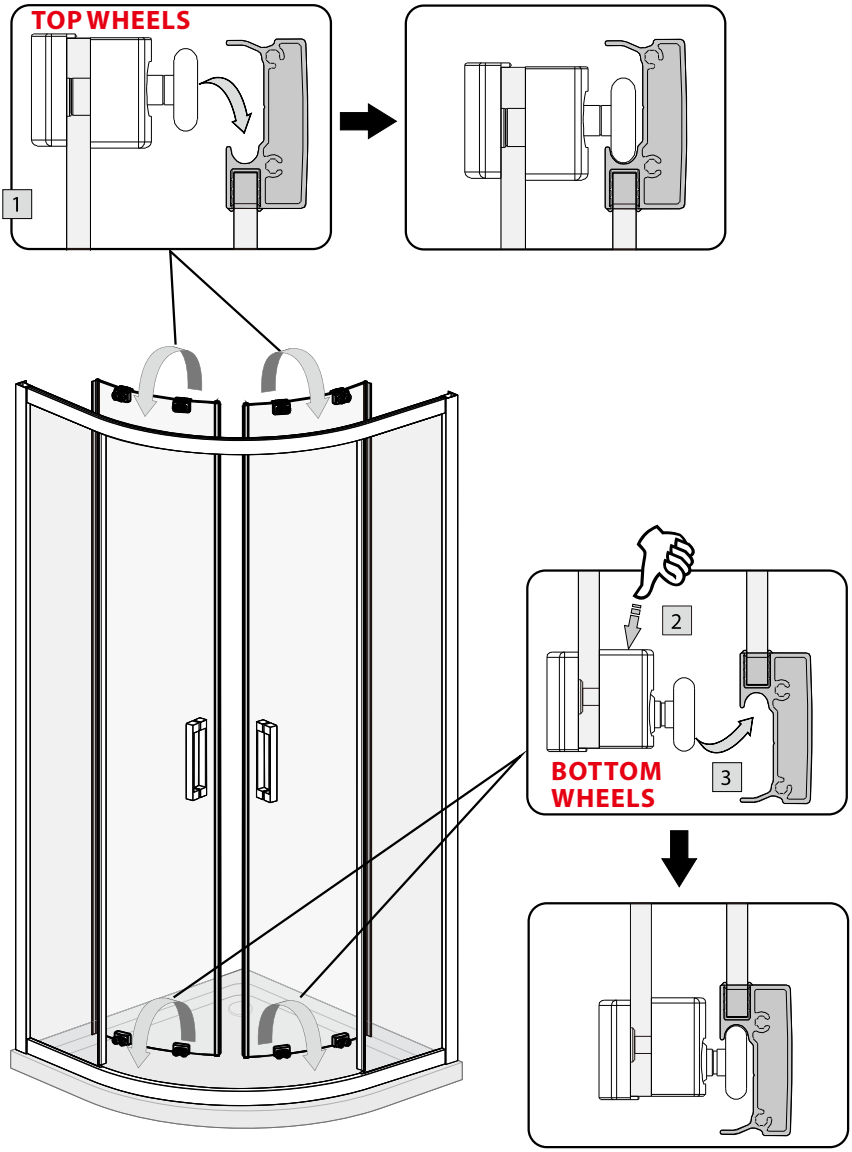
TOP WHEELS
1
2
BOTTOM WHEELS
3

14

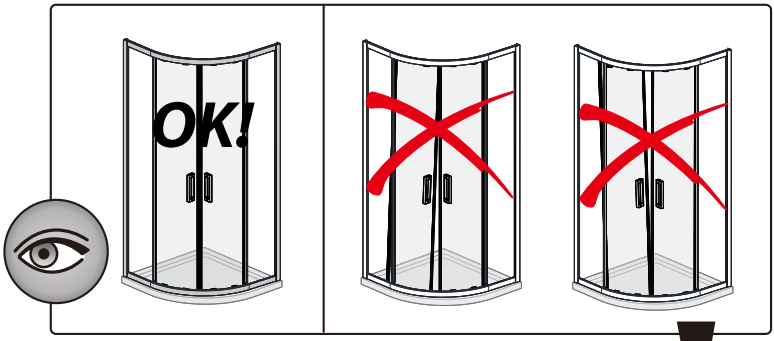

TOP WHEELS ADJUSTMENT

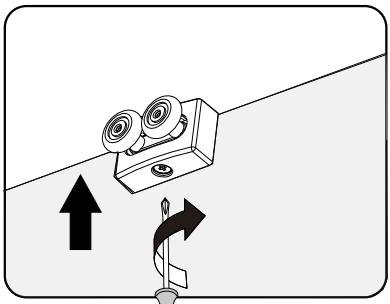

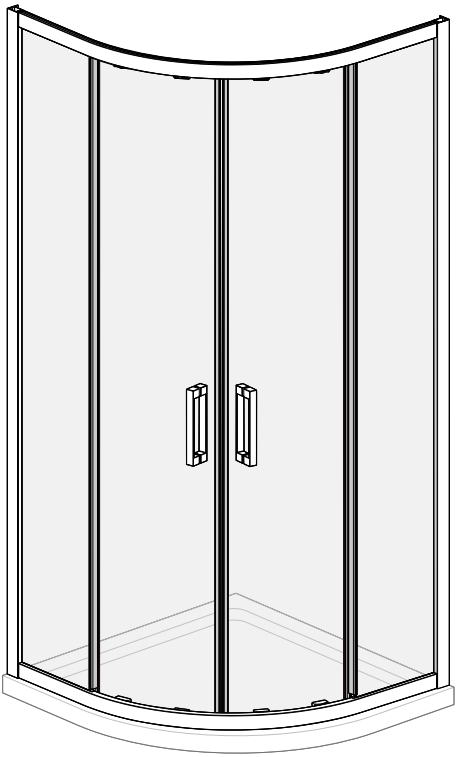

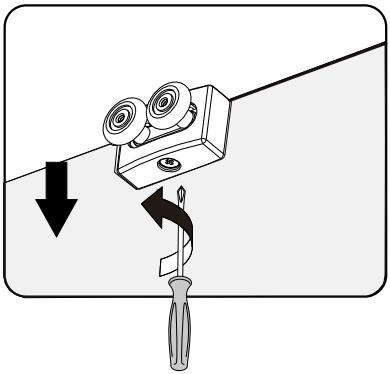

15

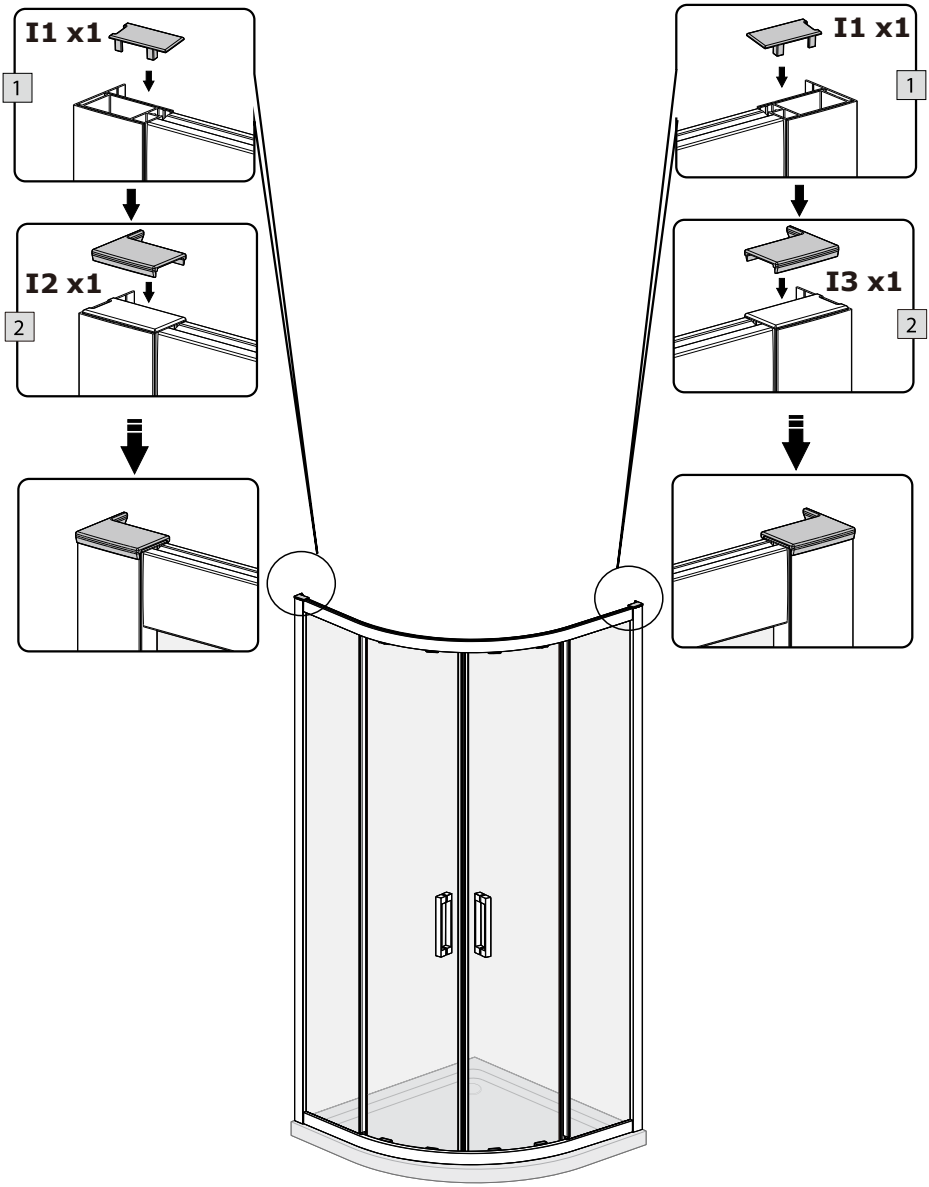

16

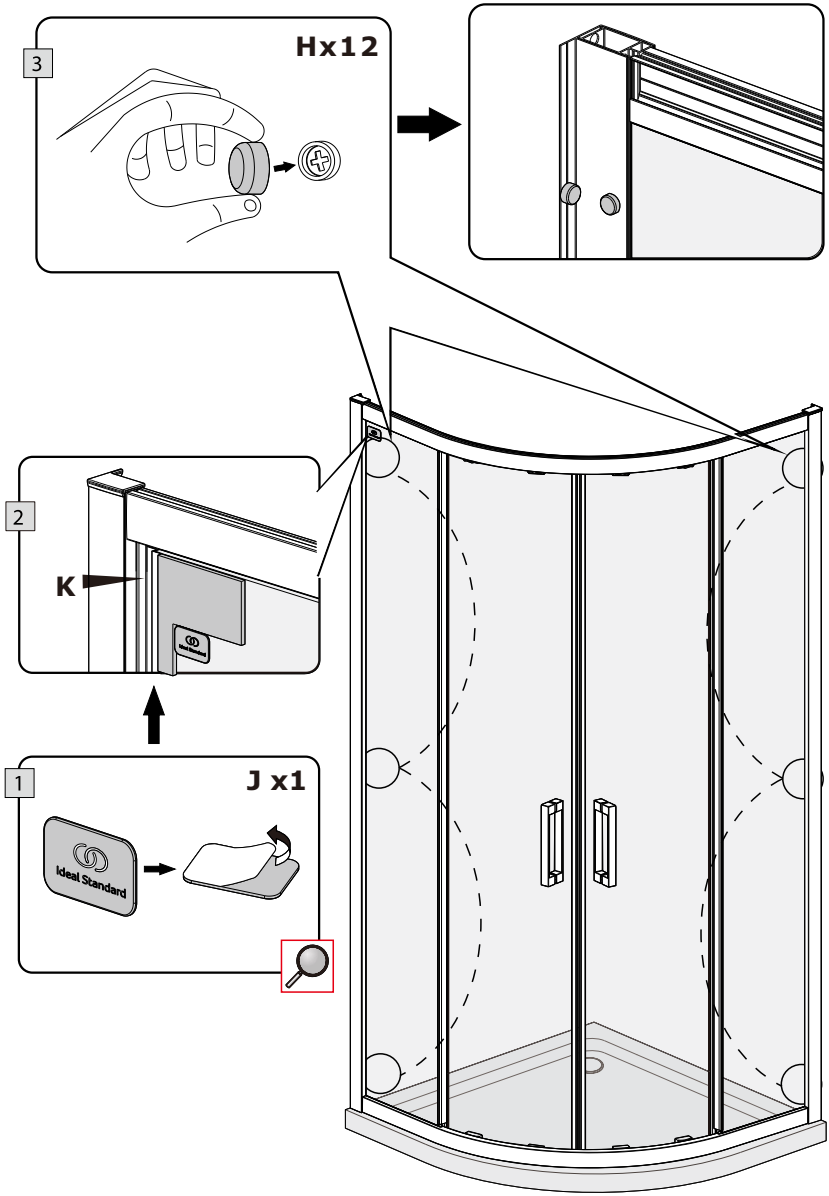

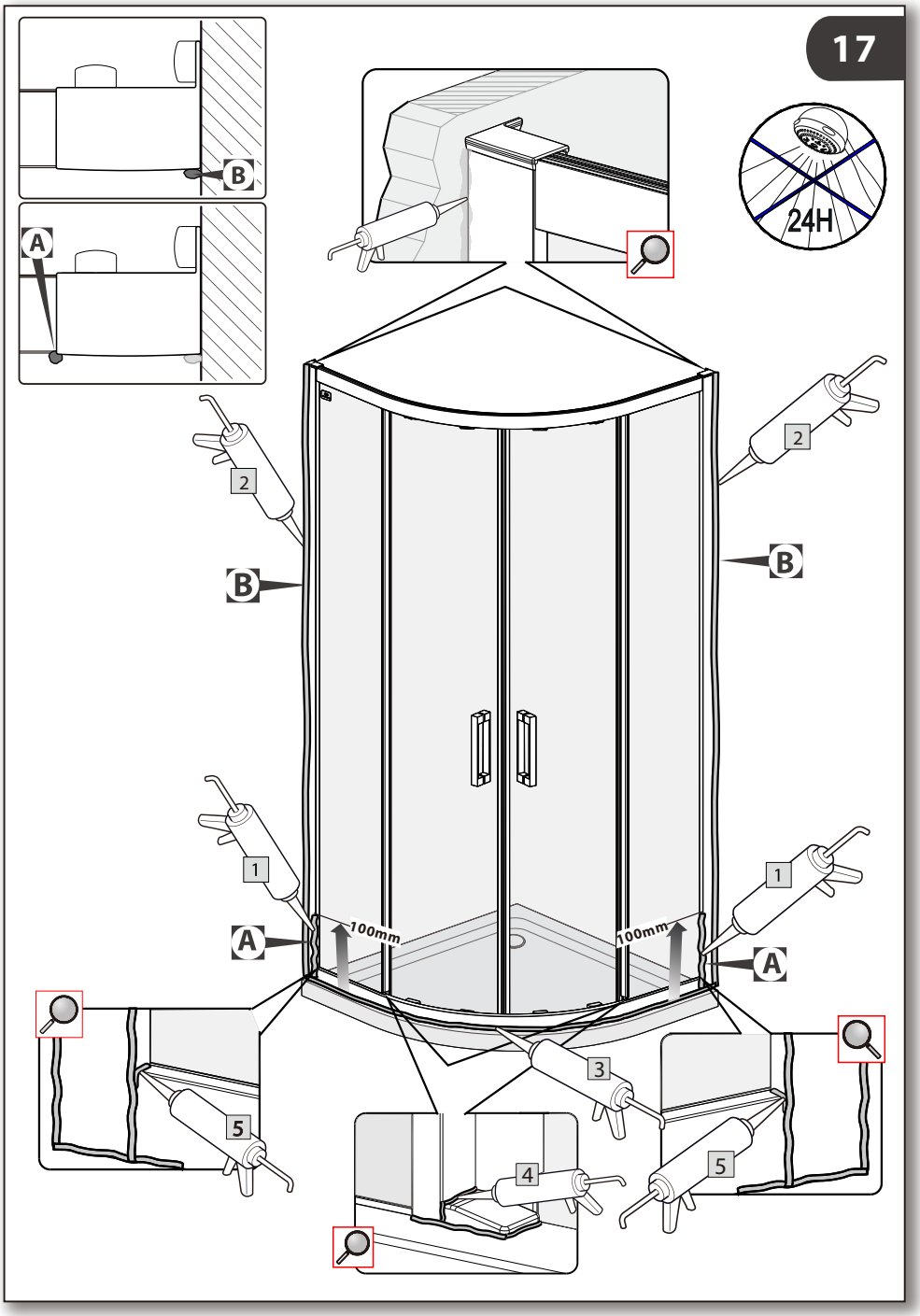
17
B
A
24H
2
2
B
B
1
1
A
A
100mm
100mm
3
5
5
4

Ideal Standard

The Bathroom Works
National Avenue
Kingston upon Hull
HU5 4HS England
Telephone: (01482) 346461
Telefax: (01482) 445886.

CUSTOMER CARE HELPLINE

0870 1296085

CUSTOMER CARE FAX LINE 01482 499611

email: ukcustcare@IdealStandard.com

Ideal Standard pursues a policy of continuing improvement in design and performance of its products. The right is, therefore, reserved to vary specifications without notice.

5103_10_20