NUANCE INSTALLATION

Panel	Dimensions (HxWxD)	Type	Adhesive
A	2420mm x 1200mm x 11mm	Postformed Panel	1 tube
B	2420mm x 1200mm x 11mm	Tongue & Groove	1 tube
C	2420mm x 600mm x 11mm	Tongue & Groove	1 tube (per 2 panels)
D	2420mm x 580mm x 11mm	Double Postformed Panel	1 tube (per 2 panels)
E	2420mm x 160mm x 11mm	Postformed Panel	1 tube (per 8 panels)

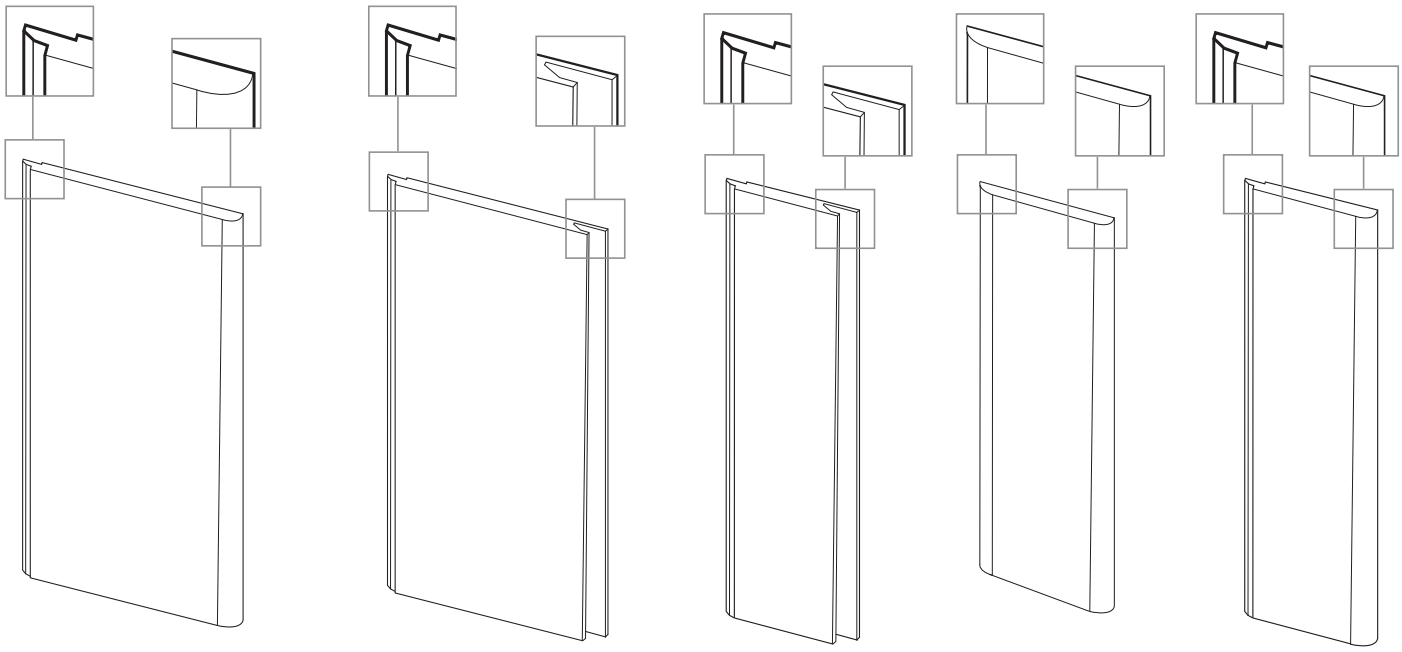

A B C D E

STORAGE

HANDLE
WITH CARE

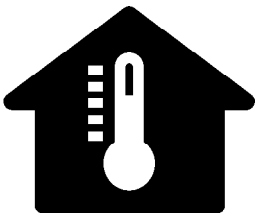

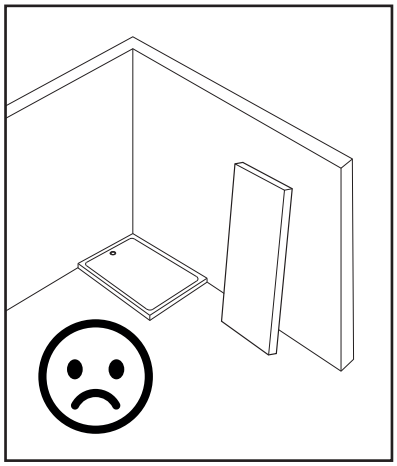

TOOLS

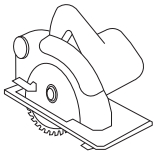

Circular Saw

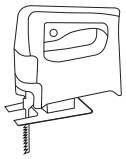

Jig Saw

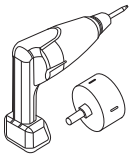

Drill

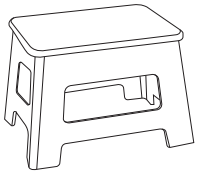

Stool/Tressle

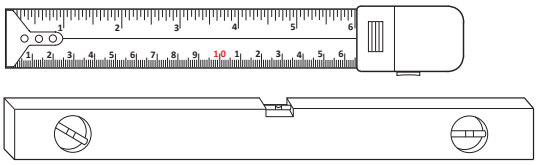

Measuring Tape & Spirit Level

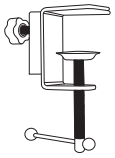

Clamp

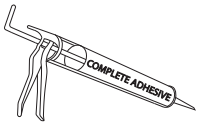

Adhesive

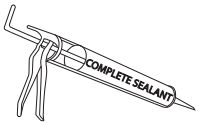

Sealant

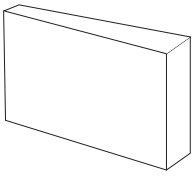

Spacers

SAFETY EQUIPMENT

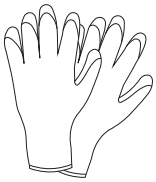

Gloves

Goggles

Boots

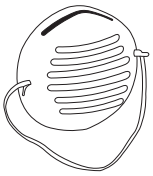

Dust Mask

Damages/Defects

Always check for compatibility of colour and surface prior to installation as slight variations can occasionally occur. If a problem is identified, please contact your supplier immediately, who will be happy to deal with any issues. Once a panel is fitted or cut, it is deemed acceptance of product. Check the panels thoroughly for signs of damages or defects and NEVER begin installation until you are 100% happy. Claims for defects/damages can not be made after installation begins.

Installation Tips

- **We highly recommend performing a 'dry fit' of the install, for alignment purposes. Then remove the panels, clean the back with a damp clean cloth and allow to dry before undertaking the main install.**
- Use Complete coloured cartidges for sealing, seaming and jointing.
- **Nuance carries a 15 Years guarantee; whilst being the original purchaser/homeowner owns the product and this is not transferable. Nuance will make good by repair and/or replacement (at its discretion) any Nuance product of its manufacture which can be shown to have failed by reason of defects in its manufacture, subject to fair wear and tear, provided the product has been installed and used in accordance with the manufacturer's instructions and that the products are used for their intended purpose/application. Proof of date and place of purchase is required. Installation to our guidelines and use of our sealants and adhesives are a condition of this guarantee.**
- **This guarantee is in addition to your statutory rights as a consumer and does not affect your rights in any way.**
- Position all tongue and groove joints vertically.
- Always start panel installations from a corner, working out. This requires the removal of the tongue on a Postformed panel or a Tongue and Groove panel.
- Always allow a 3mm gap when finishing at a fixed wall or ceiling, then backfill and finish with a bead of Complete sealant.
- When installing Tongue & Groove panels ensure the receiving edge of the first panel is the groove, and Complete sealant is applied into the groove as well as on the tongue of each joint.
- When panels meet at a tongue and groove joint, remember designs are not intended to match across the joint. This is more obvious on large scale pattern/decors.
- Use white spirit and sealant removal tools along with a clean wipe to remove excess adhesive.

WALL PREPARATION

Ensure walls are level, dry, clean & damp free.

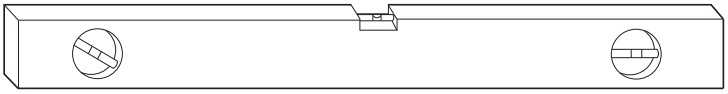

CUTTING THE PANELS

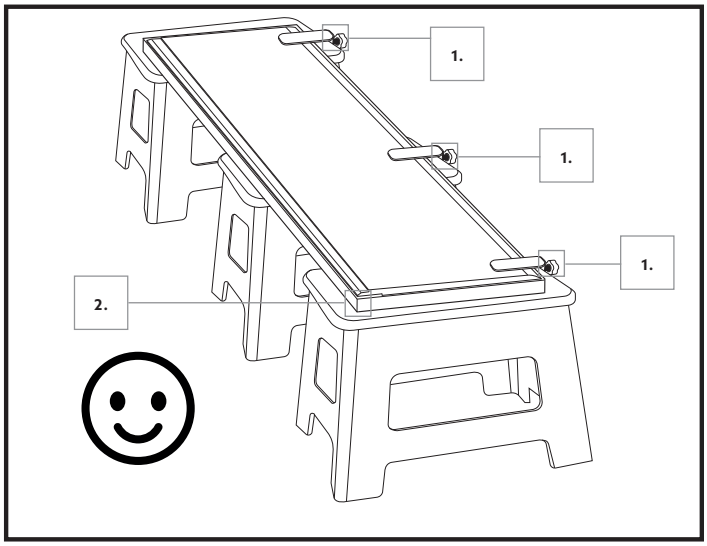

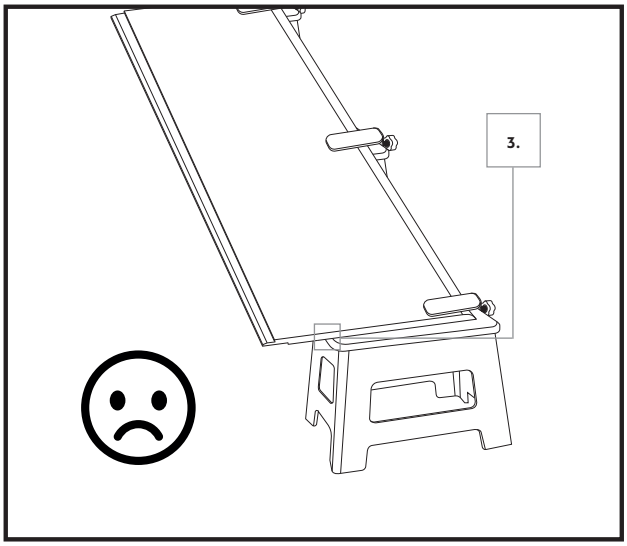

1. Fully Secure the panel

2. Cut into a supporting board

3. NEVER have the panel overhang the edge

4. Position the panel face up or down depending on the blade rotation and start all cuts into the factory finished postformed edge. Jigsaws should only be used to scribe curved shapes.
Blade type must be 160x20mm with minimum of 48 teeth fine cut saw blade

Cutting Postform panels — ALWAYS cut into the postformed edge, NEVER cut out of the postformed edge

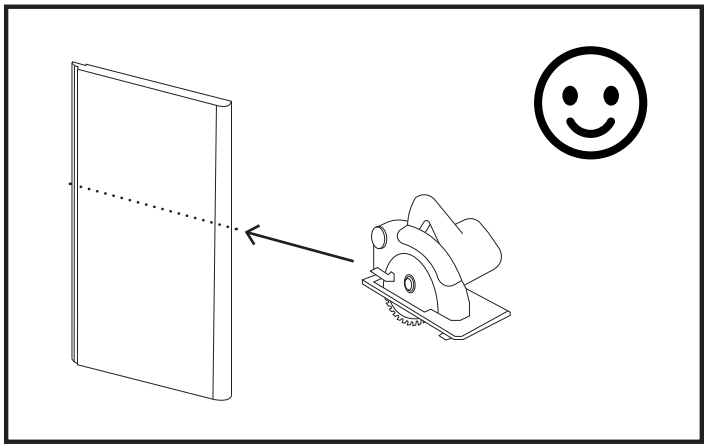

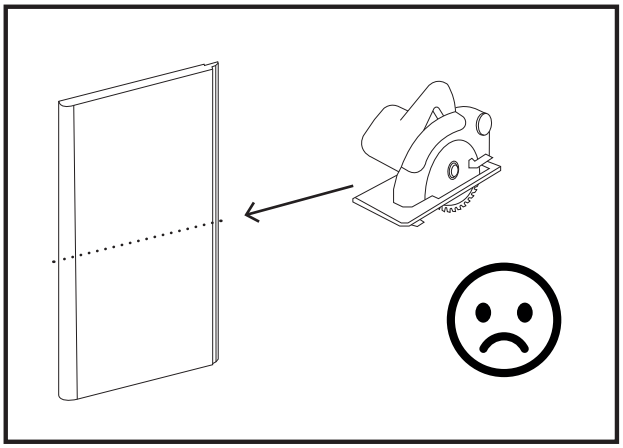

ADHESIVE APPLICATION

We highly recommend performing a **'dry fit'** of the install, for alignment purposes. Then remove the panels, clean the back with a damp clean cloth and allow to dry before undertaking the main install.

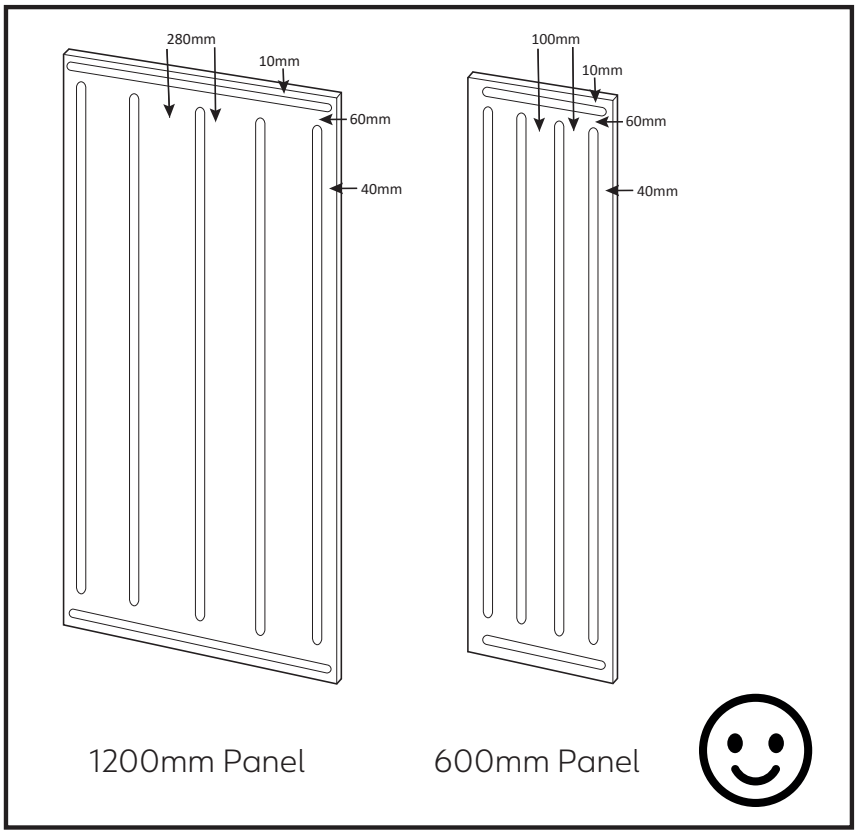

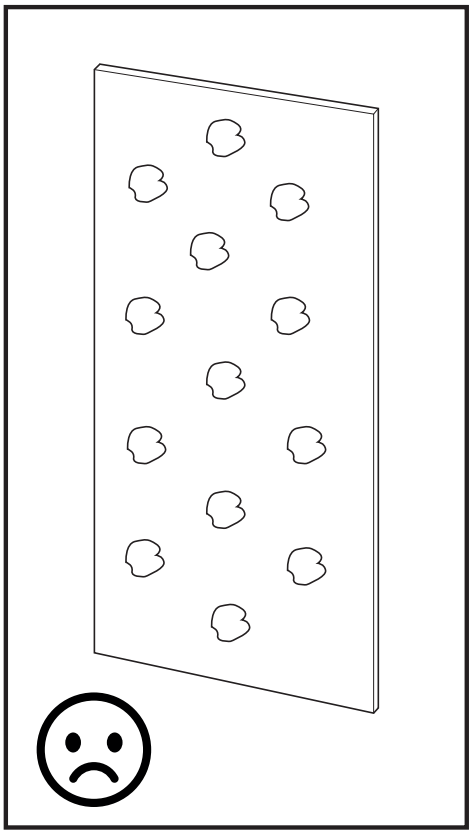

TILE/PATTERN ALIGNMENT

Panels will often require trimming to ensure the tiles/pattern align, so we recommend you dry fit your panels and make the necessary adjustments before commencing with the install.

Please Note: In some layouts, trimming both the top and bottom edges may produce a neater result.

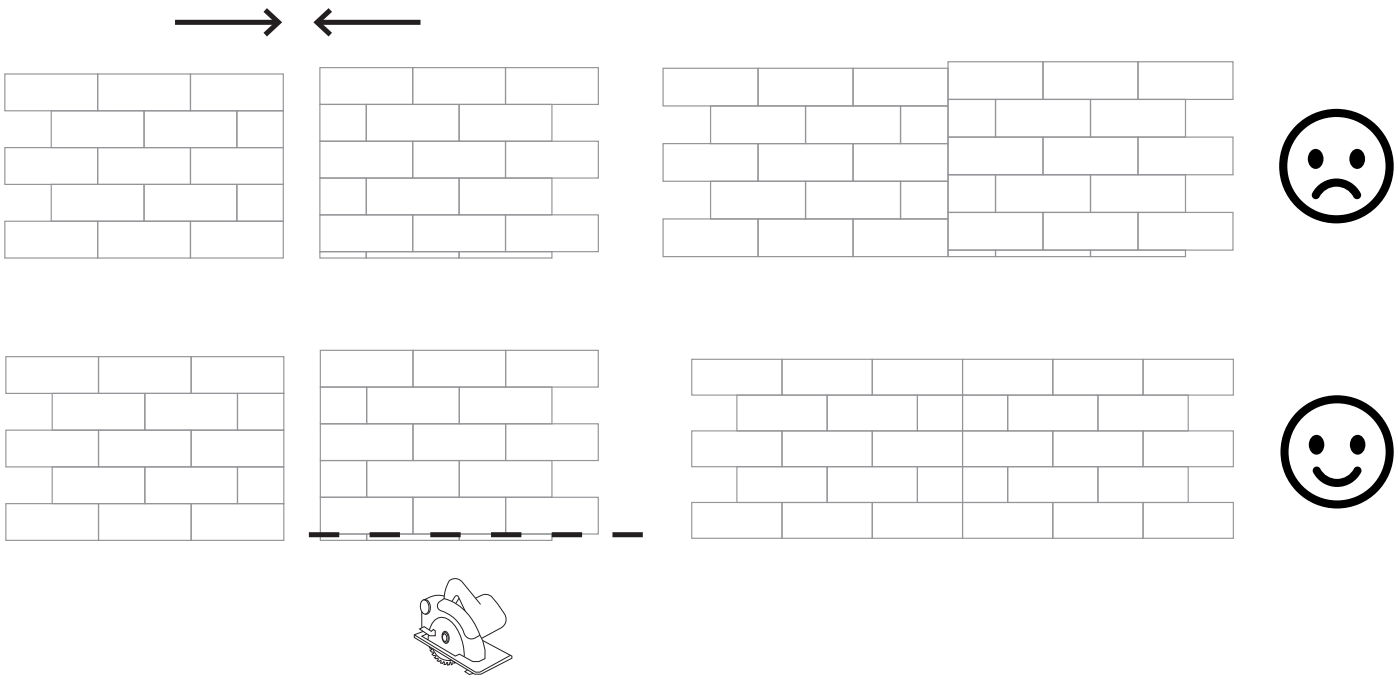

DRY FIT AROUND SHOWER TRAY

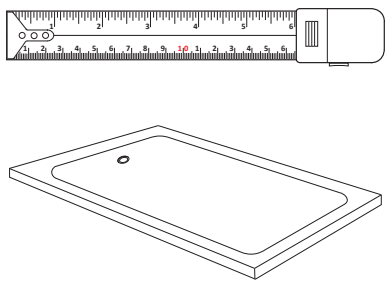

1. Measure length & depth of the tray

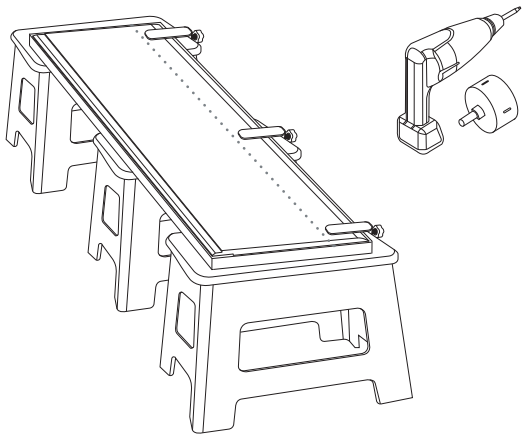

2. Cut panel edges and cut out holes for fittings and pipework

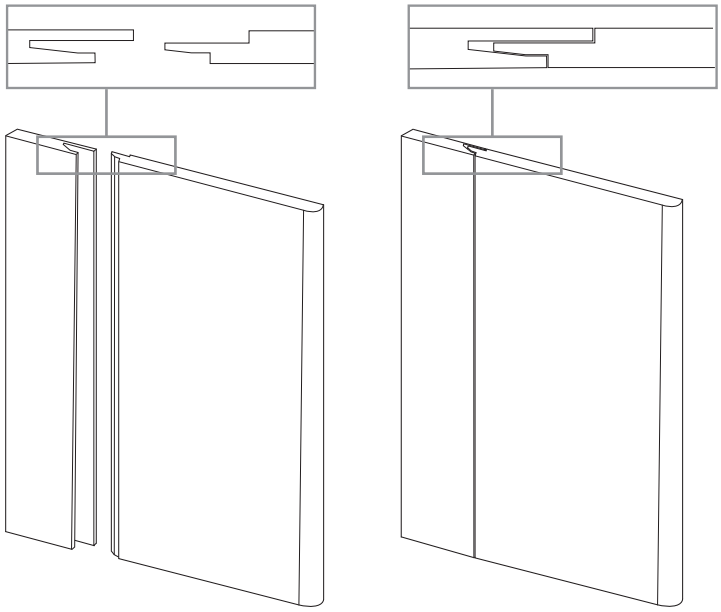

3. Connect Tongue and Groove panels

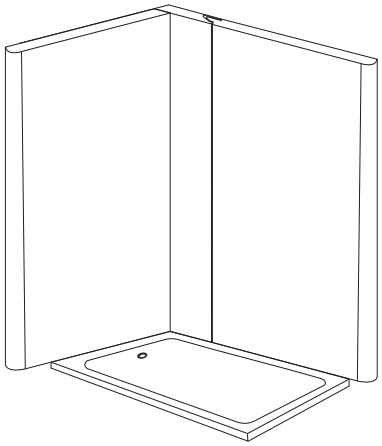

4. Place on the tray as a 'dry-fit'

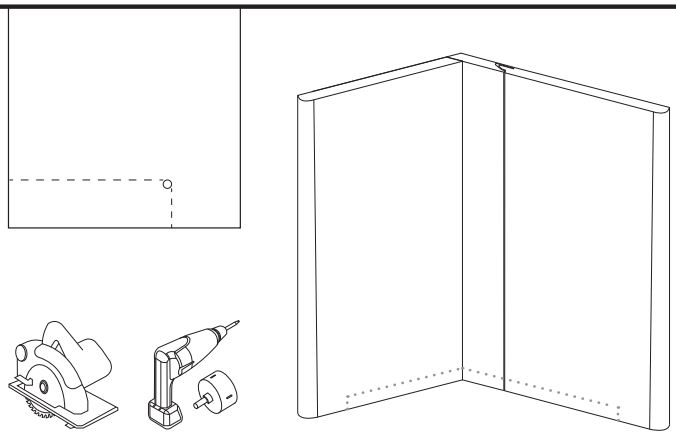

5. Mark panels for cutting

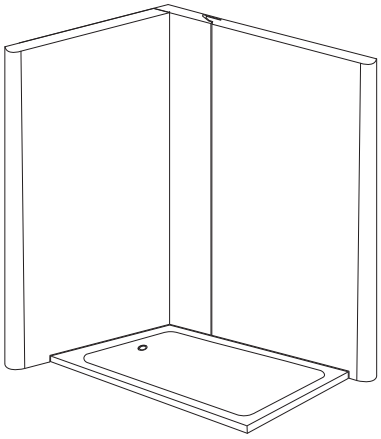

6. Place in position to ensure everything fits

PANEL INSTALLATION

Apply adhesive before fitting each panel

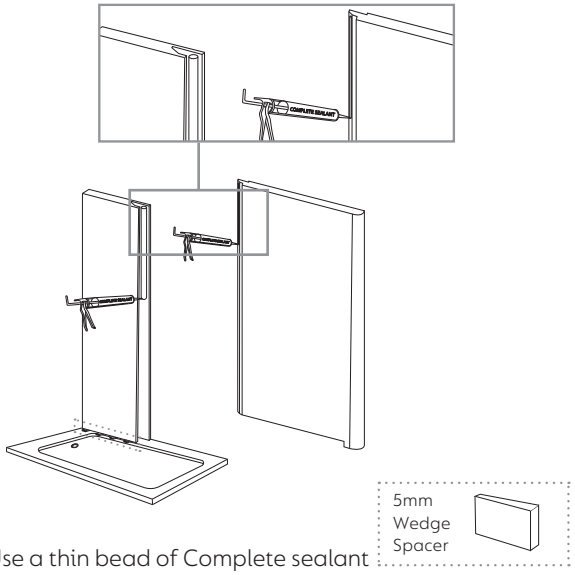

1. Use a thin bead of Complete sealant

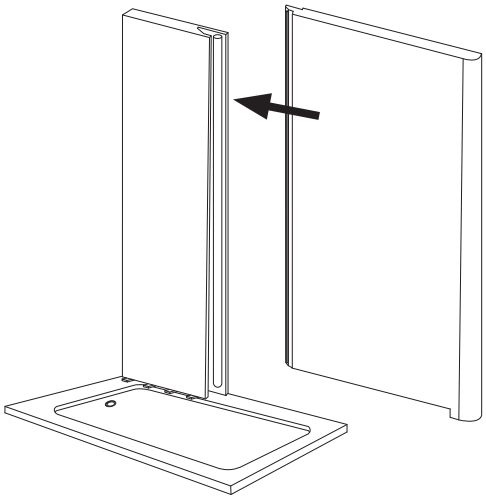

2. Connect Tongue & Groove Panel

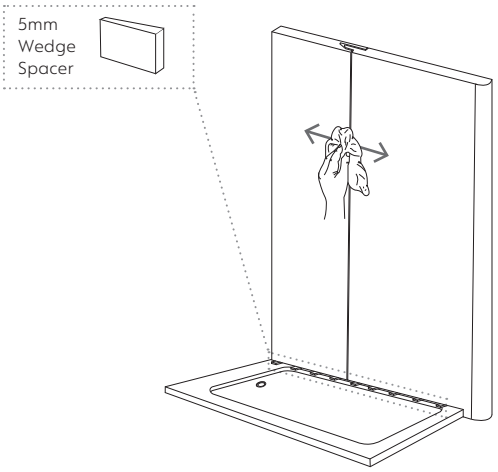

3. Clean away excess sealant with white spirit Clean away sealant in a horizontal motion, going across the joint, not up and down

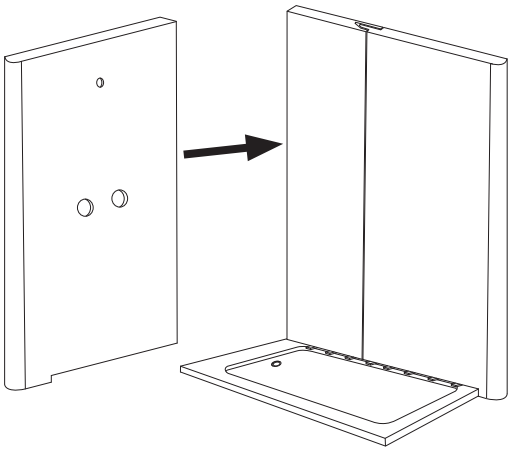

5. Place panel in position

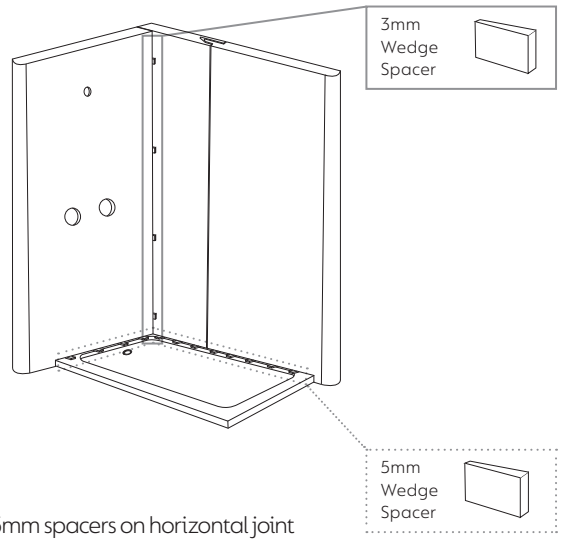

6. 3mm spacers on the vertical corner joint, 5mm spacers on horizontal joint

SEALING

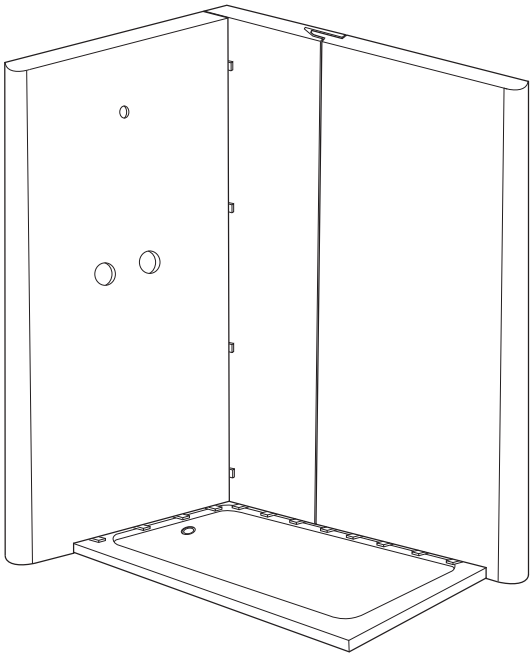

Remove spacers

1. Wait 24 hours for adhesive to cure before sealing

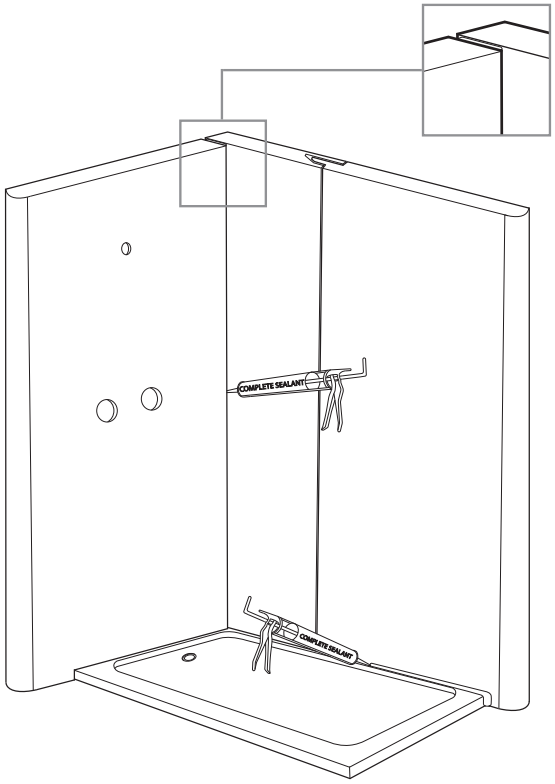

2. Remove the spacers and backfill with Complete sealant

Fixtures and Fittings **MUST** be secured to the wall behind the panel and pipework fed through.

3. Seal fittings, tray and panel joint

Clean away excess sealant immediately

4. with white spirit

AROUND A WINDOW

Applies to panels D & E from page 1
Apply adhesive before fitting each panel

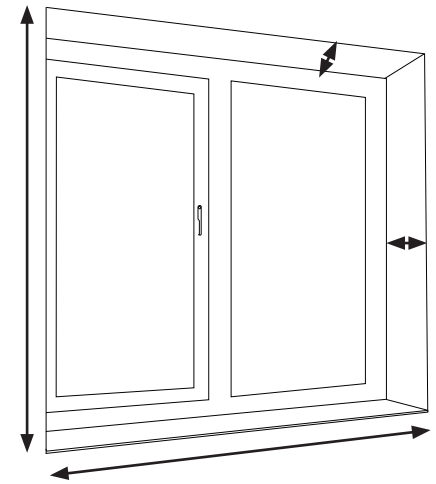

1.

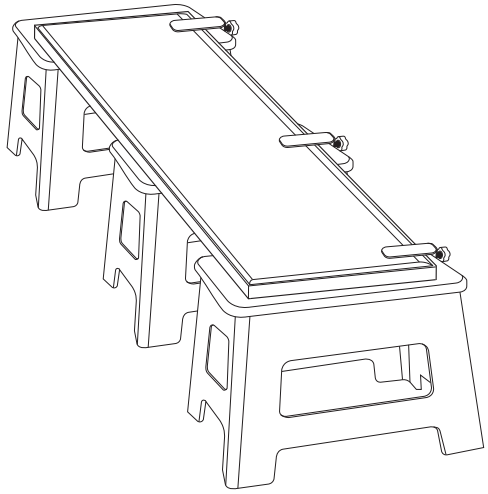

2.

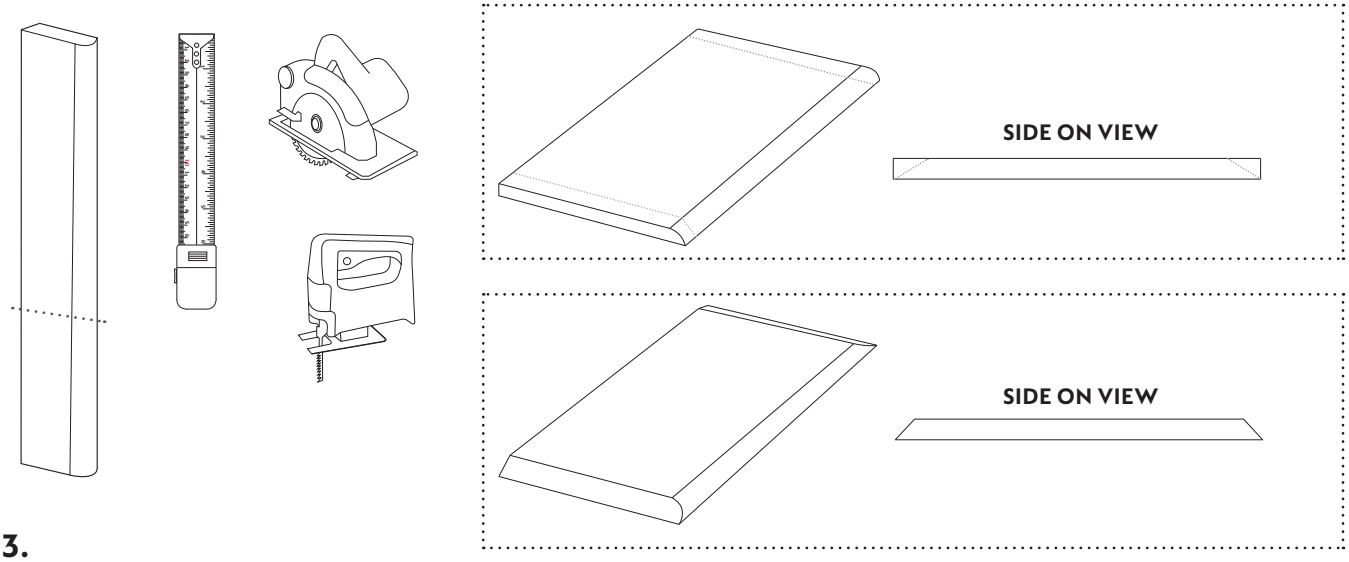

3.

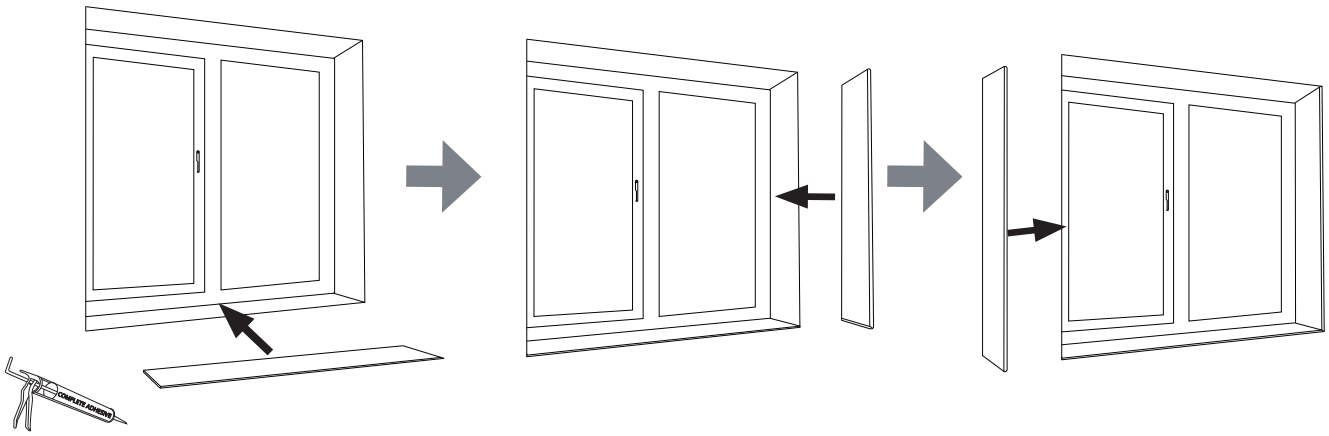

4. Apply adhesive to the panel and position.