Liberty
One Door Slider and Side Panel
KT1DC + KTR1C / TT1DC + TT1DC

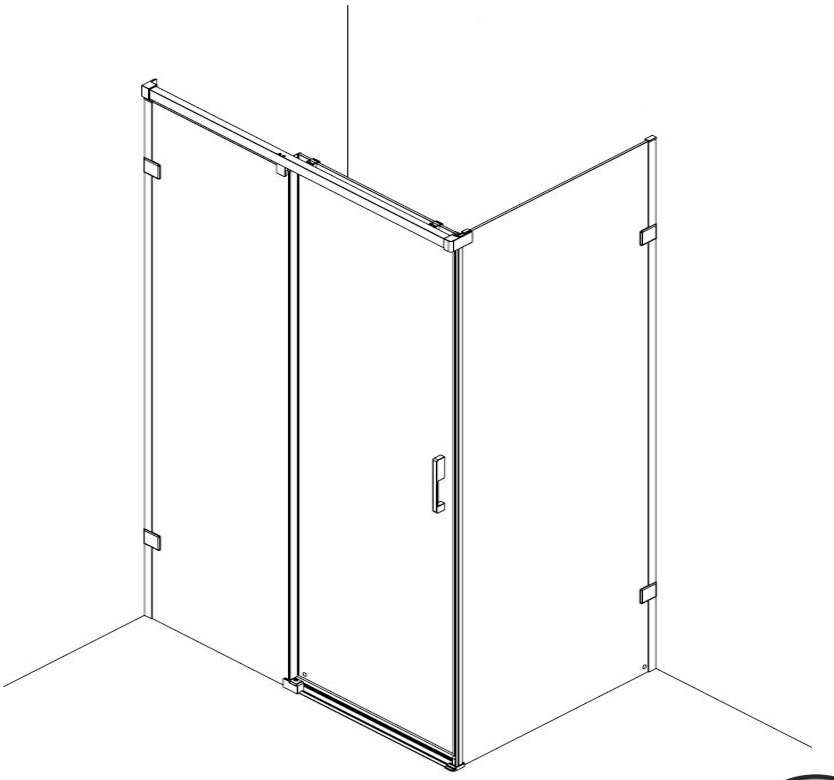

Handling

Be aware toughened glass can shatter if not handled correctly. It should not be subjected to any sharp impact and it is essential to protect the glass by resting it on a soft protective surface during installation such as cardboard or carpeting. It is recommended to wear PPE at all times during installation.

Pre-Installation Checks

1. Please take time to read these instructions prior to installing your product, including the Tray Sizes section below.
2. Check you have the correct product, by looking at the labels on the side of the product packaging.
3. Check all the product components and fixing kits are in the box - these are listed on the next page.
4. Please check the product for defects or damage, once the installation has commenced we cannot accept responsibility for any defects or damage.
5. Before you commence any drilling check there are no hidden electrical cables and/or water pipes.
6. No attempt should be made to re-work the toughened safety glass.
7. The installation of the product should be performed by two persons.
8. It is strongly recommended the product is fitted on a tiled surface or similar waterproof surface - which are tiled and grouted before product is installed.
9. It is strongly recommended that the walls the product is going to be installed on are vertical, and the floor/tray is level.
10. Please note that some natural misting may occur when you remove this product from its packaging, due to the addition of the glass protection pre-coating. If this does occur this can easily be removed with a soft, dry cloth.

Tray Sizes

Important: You MUST measure your tray before you proceed with installation. Liberty Products have been designed to fit on standard Roman trays which have only been tiled over by 10mm at a maximum, If your tray exceeds this given value, you may need a bespoke product. The 'Adjustment' displayed in the brochure or on your bespoke customer drawing is not the required tray size - your tray must be at least 10mm larger than the MID Adjustment of the product.
Refer to Step 1 for a guide on how to measure your tray accurately before proceeding any further - Roman will not be liable if you begin installation without correctly measuring your tray, to the realisation it doesn't fit.

Consumer Guarantee

Please make sure the purchaser/end user completes and returns the guarantee card which is enclosed with this product. Failure to validate the Guarantee will mean only the 1 Year Statutory Guarantee will apply.

PO Box 125, Whitworth Avenue,
Aycliffe Business Park,
Co Durham DL5 6WX

To obtain a copy of the Declaration of Performance for this product, please go to: www.ce-dop.com, contact us on +44 (0) 1325 328034, or write to us at the above address, quoting the product reference number where possible.

REV06 - 02.2023

Equipment Checklist: Not Supplied

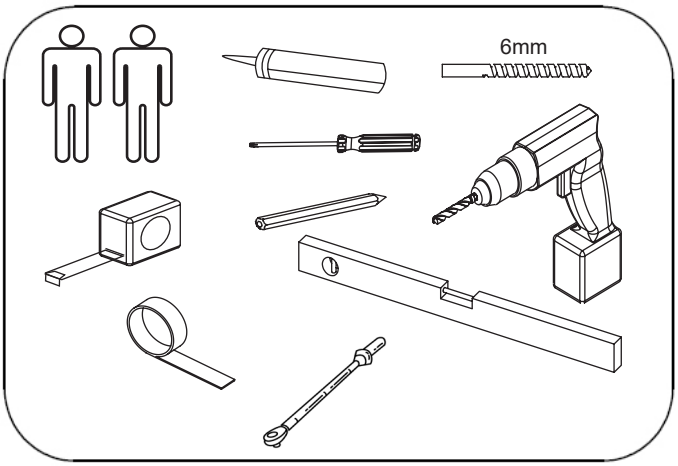

Fixing Kit Components

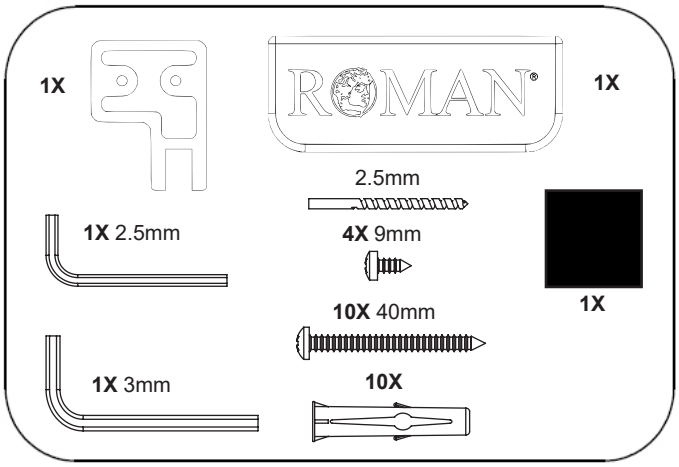

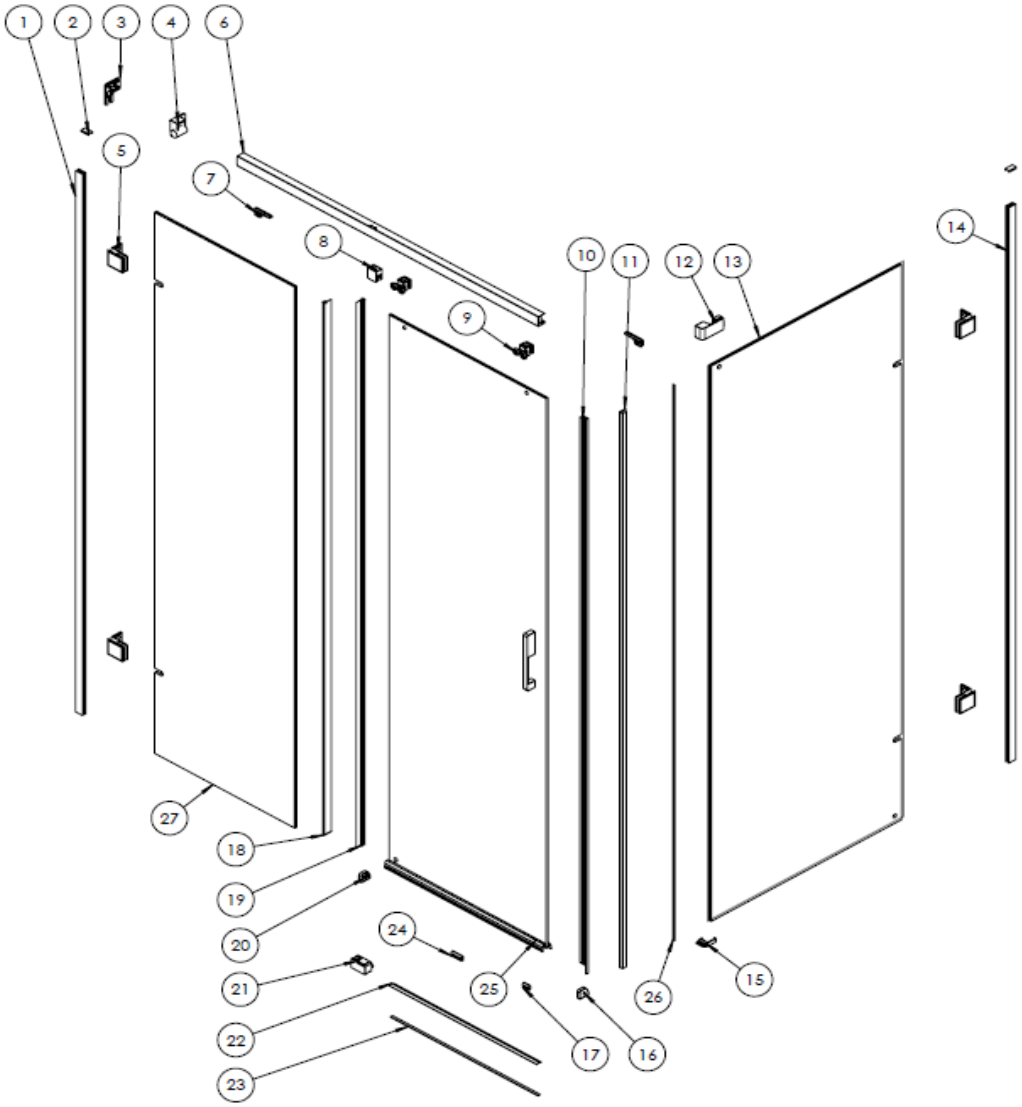

No.	Description	Qty.	No.	Description	Qty.	No.	Description	Qty.
1	Wall Profile (Short)	1	11	Magnet Extrusion	1	21	Door Bottom Guide	1
2	Top Cap	2	12	Corner Bracket	1	22	Bottom Rail	1
3	Top Rail Wall Marker	1	13	Side Panel Glass	1	23	Door Guide Seal	1
4	Top Rail Wall Bracket	1	14	Wall Profile (Long)	1	24	Rubber Stopper (Short)	1
5	Wall Bracket	4	15	End Moulding	1	25	Door Assembly	1
6	Top Rail	1	16	Corner Moulding (LH)	1	26	Self Adhesive Strip	1
7	Door Stops	2	17	Rubber Stoppers (Long)	2	27	Door Panel Glass	1
8	Glass Clamp	1	18	Flipper Seal (Short)	1			
9	Bearings	2	19	Flipper Seal (Long)	1			
10	Door Magnet	1	20	Corner Moulding (RH)	1			

Step 1 - Tray Sizes

Your area must be tiled and grouted before measuring your tray - refer to your tray installation instructions and ensure this is done correctly. This is because tray measurements are taken from the tiled wall. Once tray installation is complete you can proceed to measuring the area. Liberty Products have been designed to fit on trays which have been tiled over by 10mm **maximum** (product will still fit if it has been tiled less than this). The tables below show the range of tray widths which will allow for correct fitment - this is for standard products only. For Bespoke products please refer to your customer drawing for the MID Adjustment of the Door / Side Panel, and add 10mm for your required/minimum tray width.

Door Code	Tray Width
KT1D12C / TT1D12C	1190mm - 1200mm
KT1D14C / TT1D14C	1390mm - 1400mm
KT1D15C / TT1D15C	1490mm - 1500mm
KT1D17C / TT1D17C	1690mm - 1700mm

Side Panel Code	Tray Width
KTR1C8 / TTR1C8	790mm - 800mm
KTR1C9 / TTR1C9	890mm - 900mm

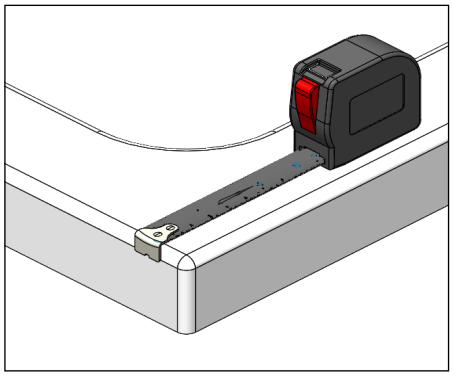

Measure from the very outside of the tray - before the radius. Go all the way to the tiled wall.

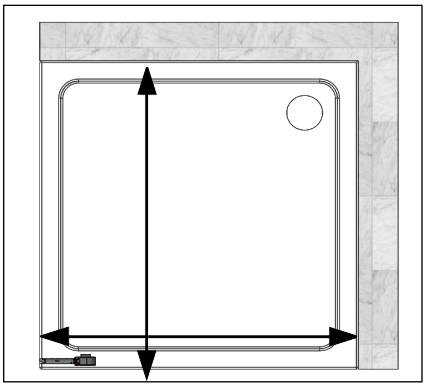

Decide which side the Door will go, and which side the Side Panel will go. Use the table above and measure both sides of the tray.

If your tray exceeds the given amount for your product size, you may need a bespoke product.

Step 2 - Pre-Installation Checks

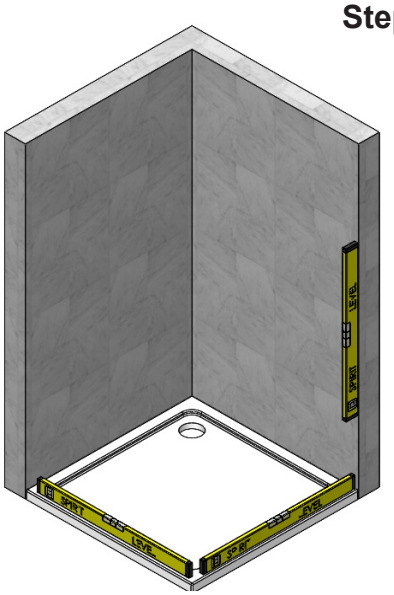

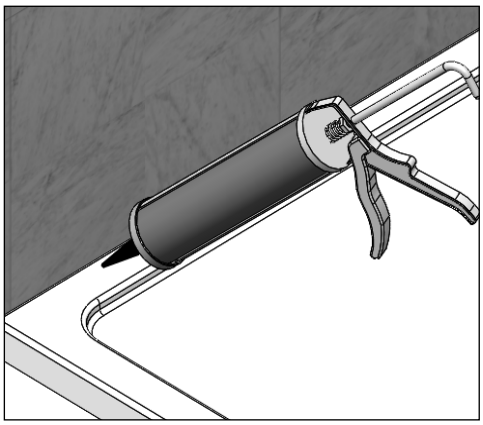

1. Make sure the tray is installed as per the manufacturer's instructions.
2. Check your Tray and Walls are level on all sides (the bubble on the spirit level must be in the centre of the 2 lines).
   - If the Walls & Tray are not level you will not achieve the +/- 7mm of adjustment.
3. Stand in the tray and check that there is no adverse movement (correct if necessary).
4. The walls should be tiled and grouted up to the tray.
5. The tiles and the tray should be sealed using a good quality bathroom sealant:
   - Spray the seal and joints with the shower head and check for leaks when the silicon has cured.
   - Check the plumbing for leaks.
   - DO NOT plasterboard over the tray.
   - DO NOT grout the tiles when the enclosure has been fitted, the grout may discolour the aluminium profiles.

Step 3 - Door Panel Wall Profile

IMPORTANT: The table below is for standard products only. If you have purchased a bespoke product, measure the width of the Return Panel and for an 8mm product, add 34mm for dimension 'X', and for 10mm add 6mm.

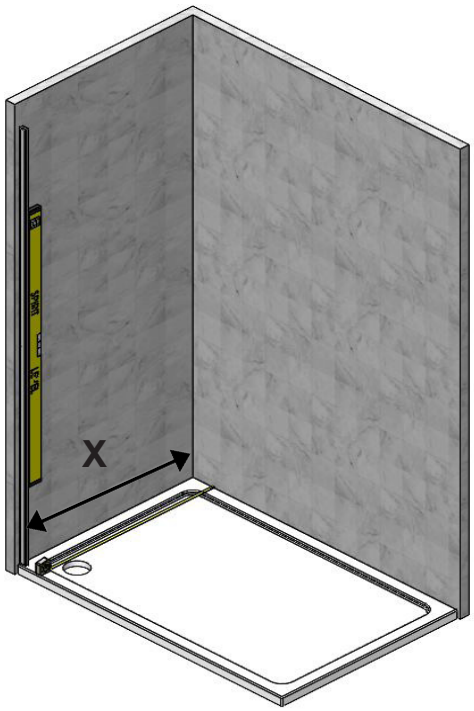

1. Decide which side your Slider will be sat on, and find your correct 'X' distance using the table below/text above (this suits your side panel size) and measure from the opposite wall using a tape measure, and mark the wall using a pencil.
2. Place a Spirit Level onto the pencil mark and add a pencil line fully up the wall.
   - **Placing some masking tape where the Wall Profile will go will help with marking out and protect the tiles when drilling.**
   - **Use the Spirit Level and ensure the pencil line is completely vertical.**
3. Place the inside of the Wall Profile onto the pencil line making sure that it is fully vertical.
4. Mark the Wall through the holes in the Wall Profile.
5. Remove the Profile, and drill with a 6mm masonry drill (not supplied). Then proceed to remove the masking tape and fit the Wall Plugs.
   - **Remove any debris.**
6. Apply a bead of sealant the width of the Panel Profile where it meets the top of the tray and the tiled wall.
7. Place the Wall Fixing screws into the holes in the Panel Profile, lining them up with the holes in the Wall and tighten all screws.

To suit Side Panel	Dimension 'X'
KTR1C8	767
TTR1C8	766
KTR1C9	867
TTR1C9	866

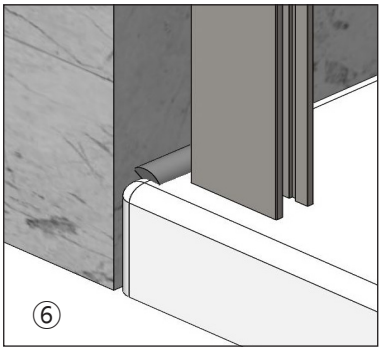

Step 4 - Side Panel Wall Profile

IMPORTANT: The table below is for standard products only. If you have purchased a bespoke product, measure the width of the top rail, and for an 8mm product, add on 9mm for dimension ' Y' and for 10mm, add 8mm.

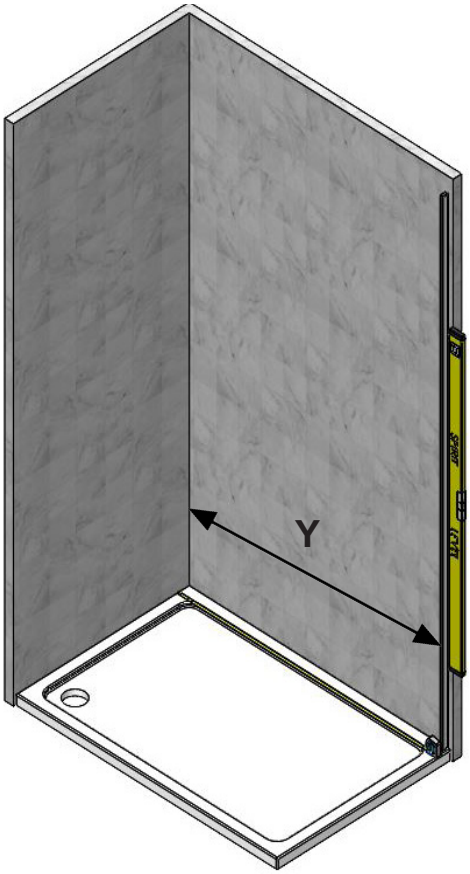

1. Decide which side your Side Panel will be sat on, find your correct 'Y' distance using the table below/text above (this suits your door size) and measure from the opposite wall using a tape measure, and mark the wall using a pencil.
2. Place a Spirit Level onto the pencil mark and add a pencil line fully up the wall.
   - **Placing some masking tape where the Wall Profile will go will help with marking out and protect the tiles when drilling.**
   - **Use the Spirit Level and ensure the pencil line is completely vertical.**
3. Place the inside of the Wall Profile onto the pencil line making sure that it is fully vertical.
4. Mark the Wall through the holes in the Wall Profile.
5. Remove the Profile, and drill with a 6mm masonry drill (not supplied). Then proceed to remove the masking tape and fit the Wall Plugs.
   - **Remove any debris.**
6. Apply a bead of sealant the width of the Panel Profile where it meets the top of the tray and the tiled wall.
7. Place the Wall Fixing screws into the holes in the Panel Profile, lining them up with the holes in the Wall and tighten all screws.

To suit Door	Dimension 'Y'
KT1D12C	1167
TT1D12C	1166
KT1D14C	1367
TT1D14C	1366
KT1D15C	1467
TT1D15C	1466
KT1D17C	1667
TT1D17C	1666

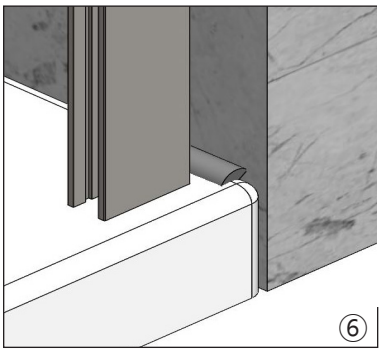

Step 5 - Fitting the Wall Brackets

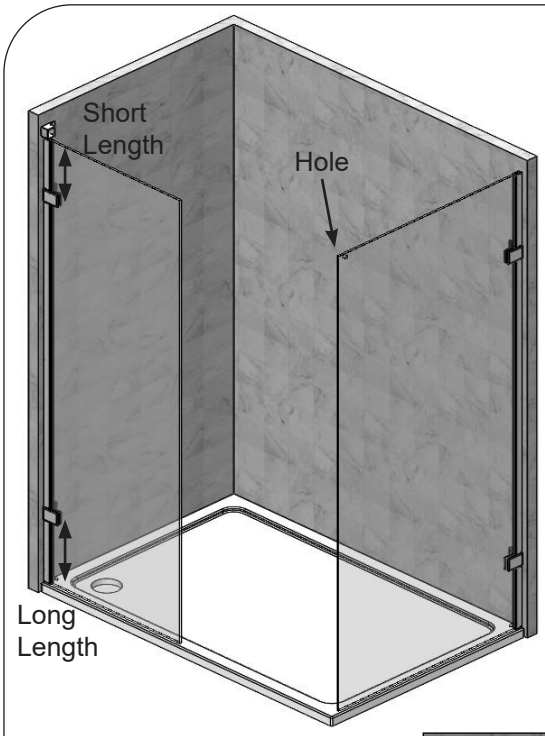

1. Place the Top Rail Wall Marker onto the top of the Door Wall Profile and up against the wall. Position it so that the long straight leg is on the outside. Mark the wall through the two holes onto the wall.
   - **Placing some masking tape where the Bracket will go will help with marking out and protect the tiles when drilling.**
2. Drill the wall with a 6mm masonry drill (not supplied). Fit the Wall Plugs and remove any debris and masking tape (if used) and fit the Top Rail Wall Bracket.
3. Dismantle the Panel Wall Brackets and fit onto the Door Panel and Return Panel Glass ensuring that all gaskets are fitted. Ensure that the brackets are fitted the correct way (screws to the inside of the enclosure).

- **NOTE: The Return Panel Glass has a hole in one corner, this needs to be at the top and to the front.**
- **IMPORTANT: There is a long and a short side to the "U notch" in the glass, please ensure that the <u>Short Side</u> is at the <u>TOP</u> of the glass.**
- **IMPORTANT: If you have have purchased a product with a print, please ensure you fit the print on the outside.**

4. Carefully lift the Glass into it's Wall Profile and up to the wall.
5. Mark the wall through the holes in the Brackets using a pencil.
6. Drill the wall with a 6mm masonry drill (not supplied). Fit the Wall Plugs and remove any debris (and masking tape if used).
7. Remove the Glass. Remove the Wall Brackets from the glass and fasten the inside brackets over the Wall Profiles up to the Wall.

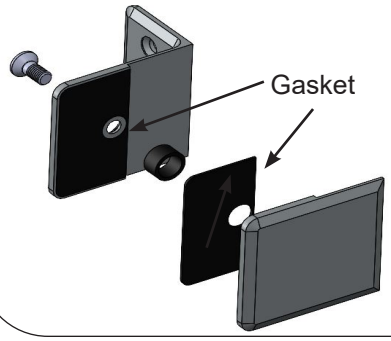

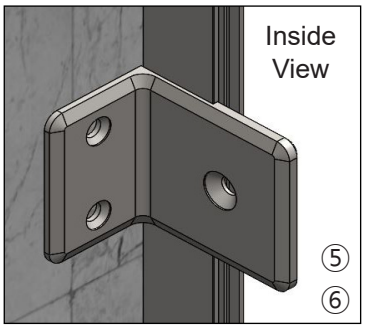

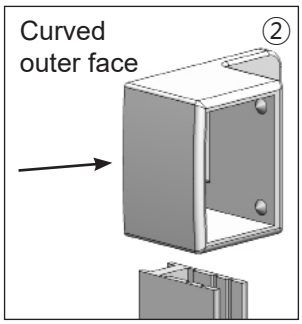

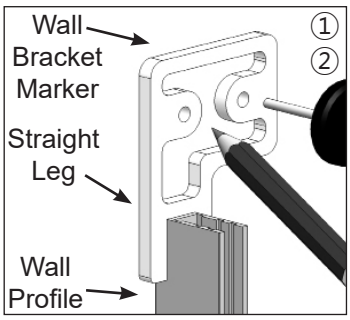

Step 6 - Top Rails and Panels

1. Fit the Panel Glass into their respective Wall Profiles and fit the Front Brackets to the Wall Brackets and tighten.
   - **IMPORTANT: If you have have purchased a product with a print, please ensure you fit the print on the outside.**
2. If you ARE going to use the Bottom Rail, fit the corner moulding up to the edge of the side panel glass as shown. Make sure all remains parallel.
3. On the Edge of the Return Panel Glass carefully remove the release paper from the prefitted tape.
4. Attach the Magnet Extrusion to the end of the Return Panel Glass, ensure the magnet is on the inside.

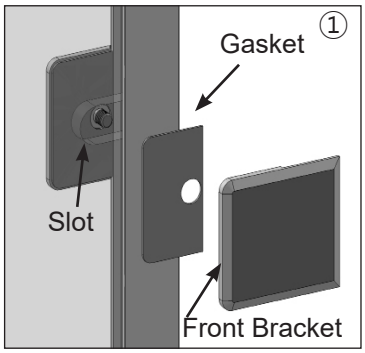

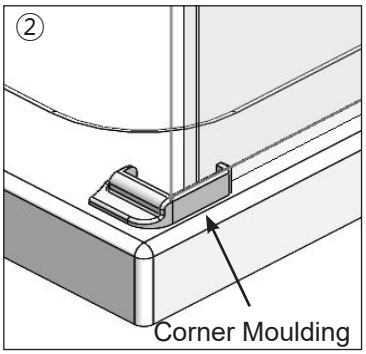

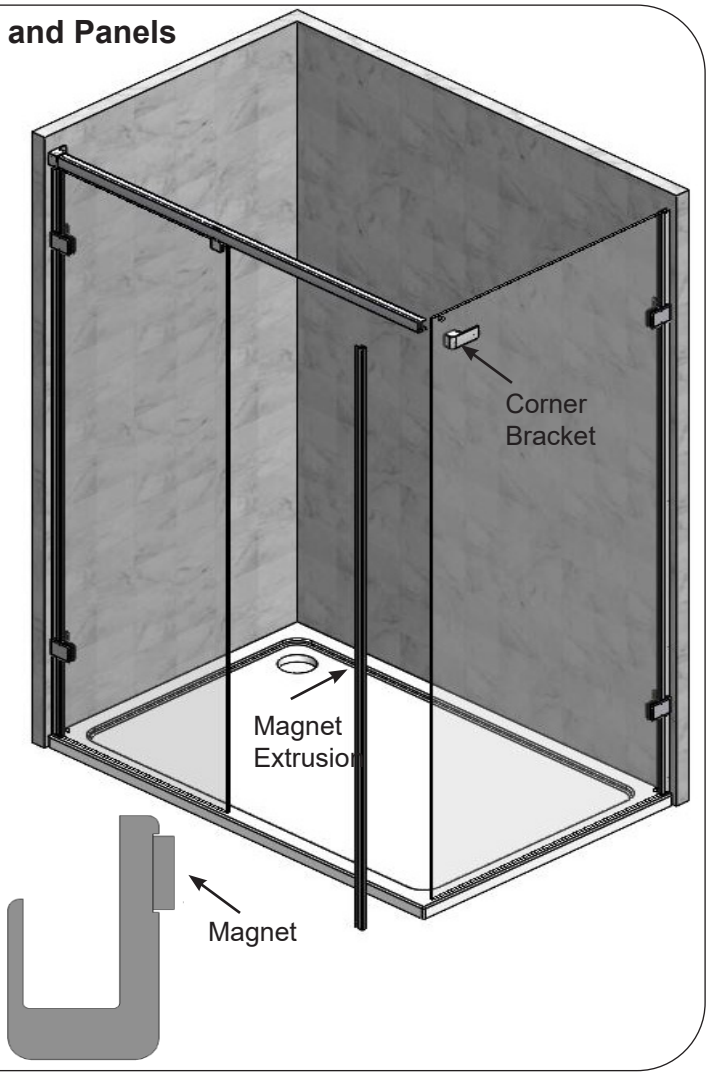

Step 6 - Top Rails and Panels Continued

IMPORTANT: The table below is for standard products only. If you have purchased a bespoke product, measure the width of the Door Glass, and add 5mm for Dimension 'Z'.

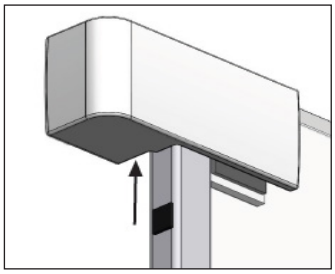

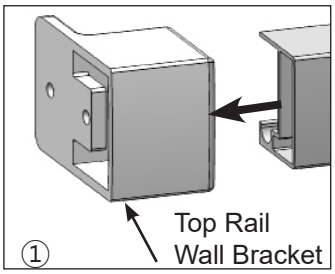

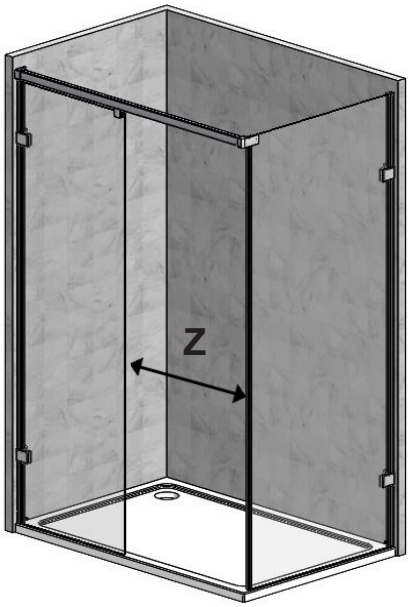

To suit Door	Dimension 'Z'
KT1D12C / TT1D12C	610
KT1D14C / TT1D14C	710
KT1D15C / TT1D14C	760
KT1D17C / TT1D17C	860

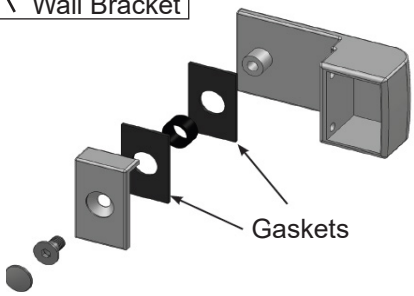

1. Slide the Top Rail into the Top Rail Wall Bracket and place the Glass Clamp over the Door Panel.
2. Fit the Corner Bracket to the Return Panel Glass and onto the Top Rail. Whilst fitting the black spacer between the bracket and magnet extrusion, ensure the gaskets are secure between the metal and glass.
3. Make sure the Panels are square then position the Top Rail centrally between the brackets and fasten.
4. Adjust the Panel Glass until you have the correct gap "Z" for your product. Ensure the Panel Glass is completely vertical and the gap is the same all the way up.

- **NOTE: Dimension "Z" is from the end of the Door Panel Glass to the inside of the Magnet Extrusion.**

5. Ensure that the Glass Clamp is 10mm away from the Glass Edge then tighten the Glass Clamp screws onto the glass ensuring that the gaskets are in place.
6. Place the Branding Badge to the top of the Panel Glass, use a small amount of silicon to keep it in place.

Step 7 - Fitting the Door

1. Place the Door assembly onto a level scratch free surface, ensure you have itthe correct way round.
   - **IMPORTANT: The outside of the Door has the flat face on the end mouldings, the inside has the curve.**
   - **IMPORTANT: If you have have purchased a product with a print, please ensure you fit the print on the outside.**
2. Remove the handle from the packaging, using the Allen Keys (supplied) remove the screws and split the handle assembly. Fit onto the Handle ensuring the Set Screws are on the inside of the enclosure.
3. Carefully dismantle the Bearing Assemblies, place the gasket on the outside of the glass (Bearing Side) then re-assemble onto the Door Glass ensuring that the wheels are on the outside of the glass.
   - **IMPORTANT: Fit the Bearing Assemblies to the door using a hand screwdriver only (DO NOT use a Drill).**
4. Fit the Bottom Door Guide onto the bottom of the Panel Glass. Adding or removing the gaskets can help with how the Door hangs.
5. Carefully place the assembled door inside the tray. With the Door the correct way round offer the Bearings into the top Horizontal Rail. When in position carefully lower the Door and press the plunger down on the Door Guide assembly to allow the bottom rail to go over, release the plunger.
   - **NOTE: When fitting, offering the door at a slight angle will make it easier to fit into the rail.**
6. There is a screw in the Bearings for adjustment purposes, adjust as necessary to align the Door.
7. When satisfied with the fitting of the Door fit the Inner Bearing Covers.

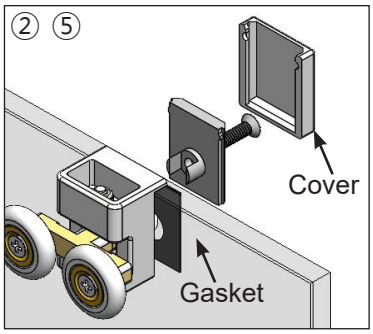

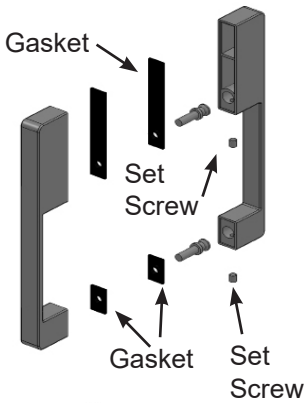

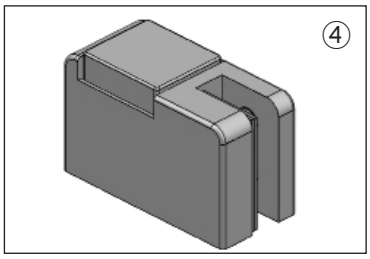

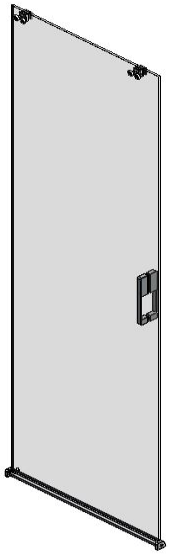

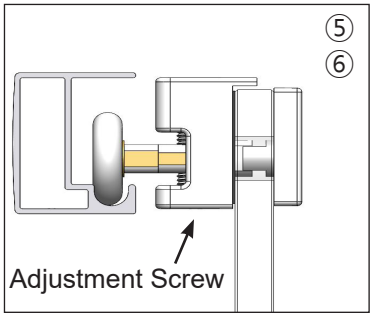

Step 8 - Magnets and Bottom Rail

NOTE: This product can be used with or without the Bottom Rail.

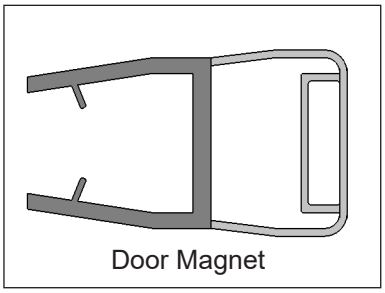

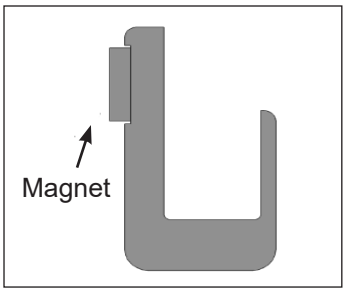

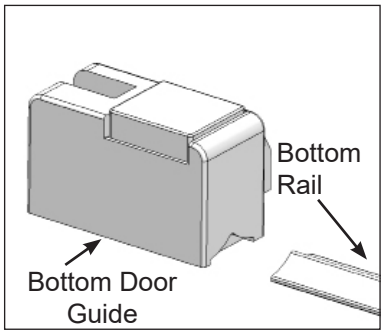

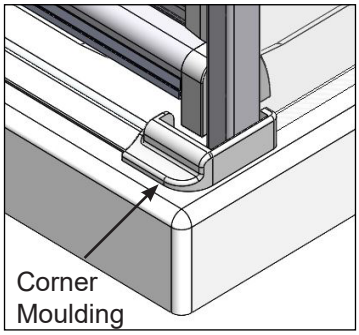

1. Fit the Door Magnet onto the Door Glass and down onto the end moulding at the handle side.
2. Close the Door and adjust the Return Panel until the Magnets line up, make sure the Door Panel remains parallel to the front of the tray.
3. If you ARE going to use the Bottom Rail then insert it into the Bottom of both the Door Guide and the Corner Moulding, when happy the Bottom Rail is in both Components. Make sure all remains parallel.
4. When satisfied remove the release paper from the underside of the Bottom Rail and stick down.

Step 9 - Seals and Sealing

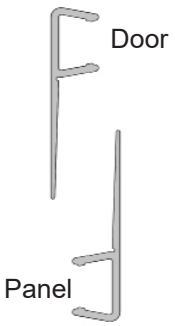

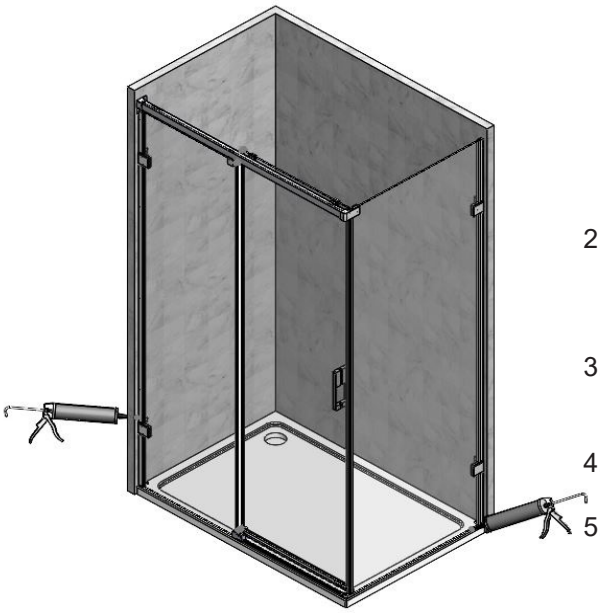

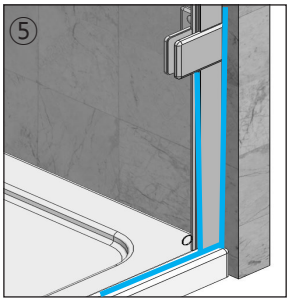

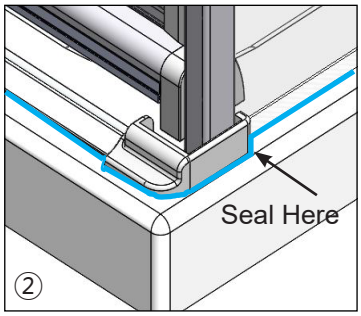

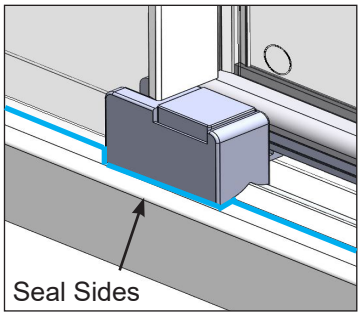

1. Fit the longer Flipper Seal to the outside of the Door ensuring the flipper faces towards the outside making sure that it sits fully down onto the Door Bottom Rail and Moulding. Then Fit the shorter Flipper Seal to the end of the Panel glass ensuring the flipper faces towards the inside and sits fully on top of the Door Bottom Guide.
2. If you have used the Bottom Rail seal the base of the enclosure to the top of the tray from wall to wall on the outside only. Seal fully around the Bottom Corner Moulding.
3. If you have chosen NOT to use the Bottom Rail then seal the base to the tray and the sides of the Bottom Door Guides.
4. Seal the Wall Profiles up from the tray on the inside and the outside.
5. From the Bottom of the Tray/Floor, on both Panels (not the Door) Seal up to the first bracket where the glass meets the Wall Profile.
6. Fit all the Top Caps.
   - **Do not seal along the base on the inside, failure to comply may result in leakage.**
   - **IMPORTANT: Failure to follow stages 4, 5 and 6 may result in serious water damage and is not covered under the terms of the guarantee.**
   - **Please allow 24 hours for the sealant to fully cure before using the enclosure.**

Trouble Shooting Guide

Should you experience any problems during installation please refer to the Trouble Shooting Guide or contact Customer Relations on:
+44 (0) 1325 328033

To enable customer relations to provide you with an excellent level of service it is important that you quote your product Code and Reference Number - these can be found on the Guarantee card.

Problem	Solution
Leaking	1. Check the tray is sealed correctly along the tiled walls prior to installation. 2. Check that the inside gap between the Tray and Wall profiles has been sealed correctly. 3. Check the base of the enclosure is sealed on the outside only. 4. Check that a bead of sealant the width of the Wall Profile has been applied. 5. Check all the seals have been cut and positioned correctly. 6. Has the Bottom Rail been fitted, if not then fit for better water integrity. Important: This enclosure should be water tested conforming to BS EN 14428
Enclosure Alignment on Tray	1. Have you read and understood Step 1 of the instructions? 2. Is the enclosure fitted onto a tiled wall? 3. Are both Wall Profiles completely vertical? 4. Are both Wall Profiles set in by the same amount?
Door not running smoothly	1. Ensure both Wall Profiles are completely vertical. 2. Ensure the tray is completely level. 3. Check the Bearings have been adjusted correctly.
Door Alignment	1. Ensure the Wall Profiles are completely vertical. 2. Ensure you have read and understood Step 1 of the instructions. 3. If the door is not aligned correctly, you have adjustment in the top wheel assemblies. 4. The Door Magnets can be moved off the Door Glass slightly to correct any gaps.

Important Information to help you maintain your Product:

The following information is all you need to keep your product looking new.

Our products are generally maintenance free, however it may be necessary to lubricate wheel assemblies and other moving parts such has hinges from time to time.

Clean your product using a mild detergent diluted in water and then polished off using a soft cloth.
If you live in a hard water area, periodically clean your product using a 50/50 solution of white vinegar and water. The solution should be left on the enclosure for approximately 5 minutes then rinsed off using warm water. This method of cleaning should remove lime scale residue.
It is strongly recommended that a quality silicone spray is used.

A list of Donts

1. Don't use acidic based products which are unsuitable for cleaning enamel surfaces.
2. Don't use abrasive cleaners or cleaners using bleach or solvents, these products will adversely affect the finish of the aluminium profiles.
3. Don't use scouring pads, powder or any sharp instruments when cleaning the enclosure.