Liberty
One Door Slider For Alcove
KT1D / TT1D

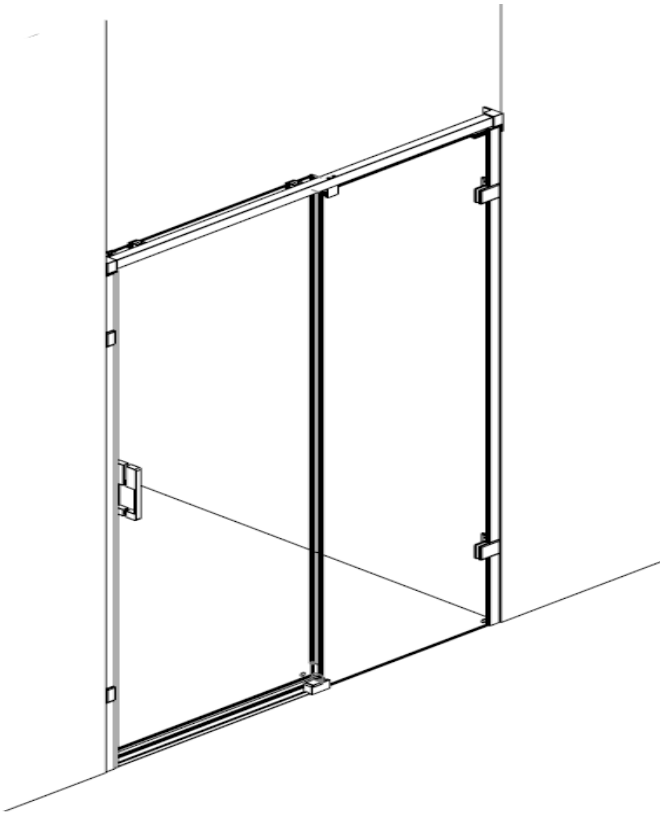

Handling

Be aware toughened glass can shatter if not handled correctly. It should not be subjected to any sharp impact and it is essential to protect the glass by resting it on a soft protective surface during installation such as cardboard or carpeting. It is recommended to wear PPE at all times during installation.

Pre-Installation Checks

1. Please take time to read these instructions prior to installing your product, including the Tray Sizes section below.
2. Check you have the correct product, by looking at the labels on the side of the product packaging.
3. Check all the product components and fixing kits are in the box - these are listed on the next page.
4. Please check the product for defects or damage, once the installation has commenced we cannot accept responsibility for any defects or damage.
5. Before you commence any drilling check there are no hidden electrical cables and/or water pipes.
6. No attempt should be made to re-work the toughened safety glass.
7. The installation of the product should be performed by two persons.
8. It is strongly recommended the product is fitted on a tiled surface or similar waterproof surface - which are tiled and grouted before product is installed.
9. It is strongly recommended that the walls the product is going to be installed on are vertical, and the floor/tray is level.
10. Please note that some natural misting may occur when you remove this product from its packaging, due to the addition of the glass protection pre-coating. If this does occur this can easily be removed with a soft, dry cloth.

Tray Sizes

Important: You MUST measure your tray before you proceed with installation. Liberty Products have been designed to fit on standard Roman trays which have only been tiled over by 10mm at a maximum, If your tray exceeds this given value, you may need a bespoke product. The 'Adjustment' displayed in the brochure or on your bespoke customer drawing is the required Alcove tray size - this is at MID Adjustment unless stated otherwise.

Refer to Step 1 for a guide on how to measure your tray accurately before proceeding any further - Roman will not be liable if you begin installation without correctly measuring your tray, to the realisation it doesn't fit.

Consumer Guarantee

Please make sure the purchaser/end user completes and returns the guarantee card which is enclosed with this product. Failure to validate the Guarantee will mean only the 1 Year Statutory Guarantee will apply.

PO Box 125, Whitworth Avenue,
Aycliffe Business Park,
Co Durham DL5 6WX

To obtain a copy of the Declaration of Performance for this product, please go to: www.ce-dop.com, contact us on +44 (0) 1325 328034, or write to us at the above address, quoting the product reference number where possible.

REV06 05.2023

Equipment Checklist: Not Supplied

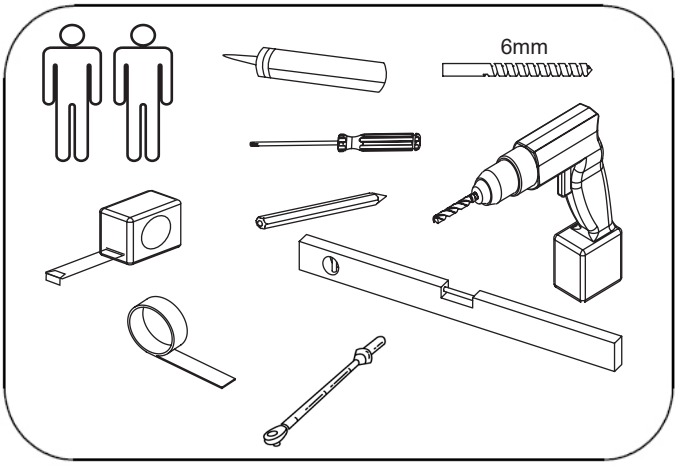

Fixing Kit Components

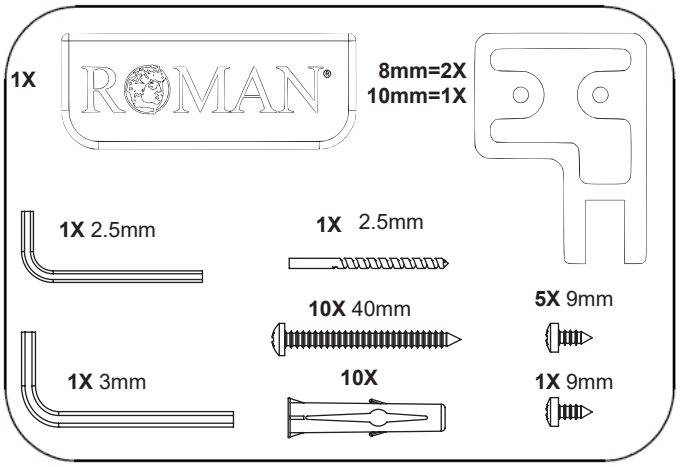

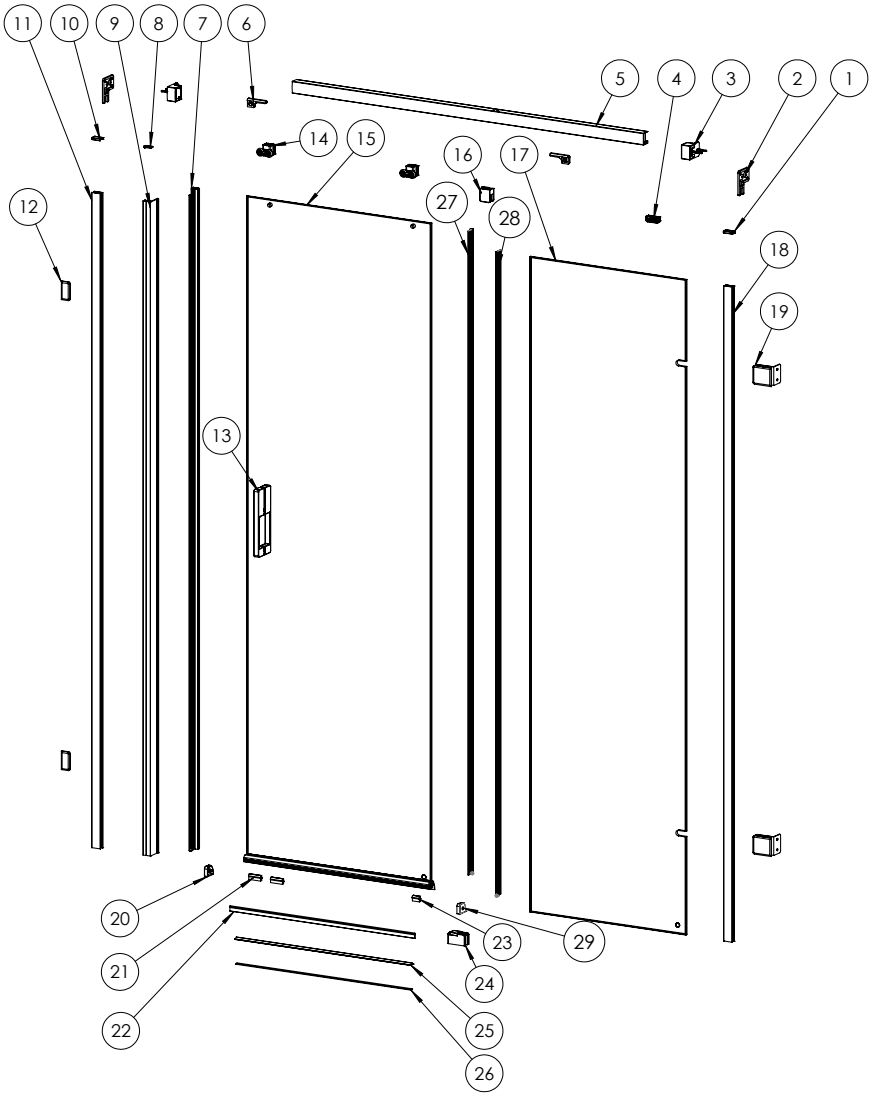

No.	Description	Qty.	No.	Description	Qty.	No.	Description	Qty.
1	Panel Profile Top Cap	1	11	Panel Wall Profile	1	21	Rubber Stops (Long)	2
2	Top Rail Wall Marker	2	12	False Covers	2	22	Level Access Seal	1
3	Top Rail Wall Bracket	1	13	Door Handle	1	23	Rubber Stops (Short)	1
4	Branding Badge	1	14	Bearings	1	24	Bottom Door Guide	1
5	Top Rail	1	15	Door Assembly	1	25	Tray Top Extrusion	1
6	Door Stops	2	16	Glass Clamp	1	26	Adhesive Strip	1
7	Door Magnet	1	17	Panel Glass	1	27	Flipper Seal (Long)	1
8	Magnet Extrusion Top Cap	1	18	Panel Wall Profile	1	28	Flipper Seal (Short)	1
9	Manet Extrusion	1	19	Wall Brackets	2	29	End Moulding (Right Hand)	1
10	10mm Top Cap	1	20	End Moulding (Left Hand)	1			

Step 1 - Tray Sizes

Your area must be tiled and grouted before measuring your tray - refer to your tray installation instructions and ensure this is done correctly. This is because tray measurements are taken from the tiled wall. Once tray installation is complete you can proceed to measuring the area. Liberty Products have been designed to fit on trays which have been tiled over by 10mm **maximum** (each wall). The tables below show the range of tray widths which will allow for correct fitment - this is for standard products only. For Bespoke products please refer to your customer drawing for the MID Adjustment of the Door, this is the required Alcove size.

Slider Code	Required Tray Width	Adjustment
KT1D12 / TT1D12	1180mm	1166mm - 1194mm
KT1D14 / TT1D14	1380mm	1366mm - 1394mm
KT1D15 / TT1D15	1480mm	1466mm - 1494mm
KT1D17 / TT1D17	1680mm	1666mm - 1694mm

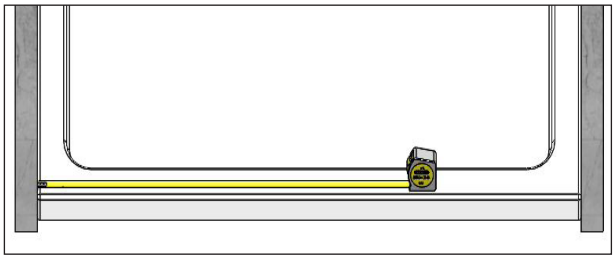

Measure from one tiled wall to the other.

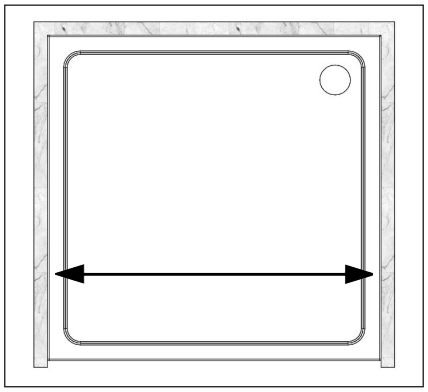

Use the table above and measure the Tray. We recommend measuring the bottom, middle and top across a 2000mm height.

If your tray exceeds the given amount for your product size, you may need a bespoke product.

Step 2 - Pre-Installation Checks

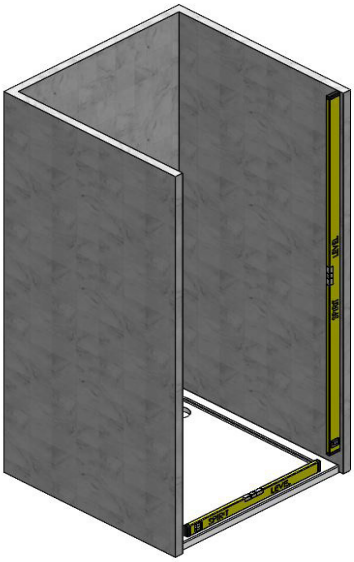

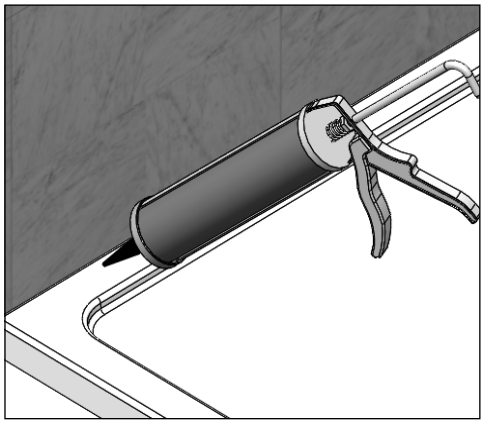

1. Make sure the tray is installed as per the manufacturer's instructions.
2. Check your Tray and Walls are level on all sides (the bubble on the spirit level must be in the centre of the 2 lines).
   - If the Walls & Tray are not level you will not achieve the +/- 7mm of adjustment.
3. Stand in the tray and check that there is no adverse movement (correct if necessary).
4. The walls should be tiled and grouted up to the tray.
5. The tiles and the tray should be sealed using a good quality bathroom sealant:
   - Spray the seal and joints with the shower head and check for leaks when the silicon has cured.
   - Check the plumbing for leaks.
   - DO NOT plasterboard over the tray.
   - DO NOT grout the tiles when the enclosure has been fitted, the grout may discolour the aluminium profiles.

Step 3 - Wall Profiles & Top Rail Brackets

IMPORTANT: If you have purchased an 8mm product, the Wall Profiles supplied are different. One profile has an 8mm channel while the other has a 10mm channel. Make sure that the 10mm Wall Profile is fitted at the side where the door is going to close. Placing some Masking Tape on the Tiled Wall in the position where the Wall Profiles are to go will not only help with marking out but will also help protect the tiles when drilling.

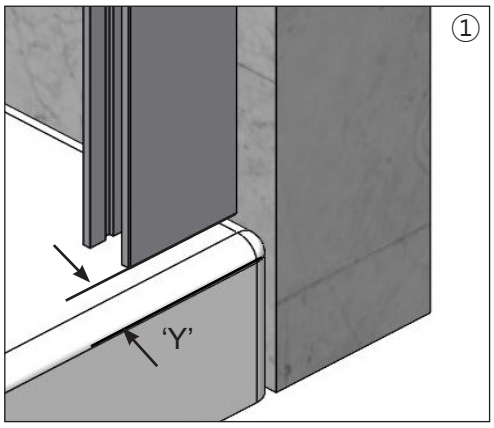

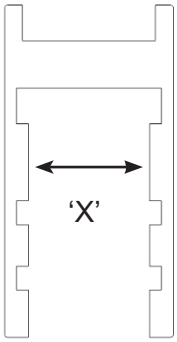

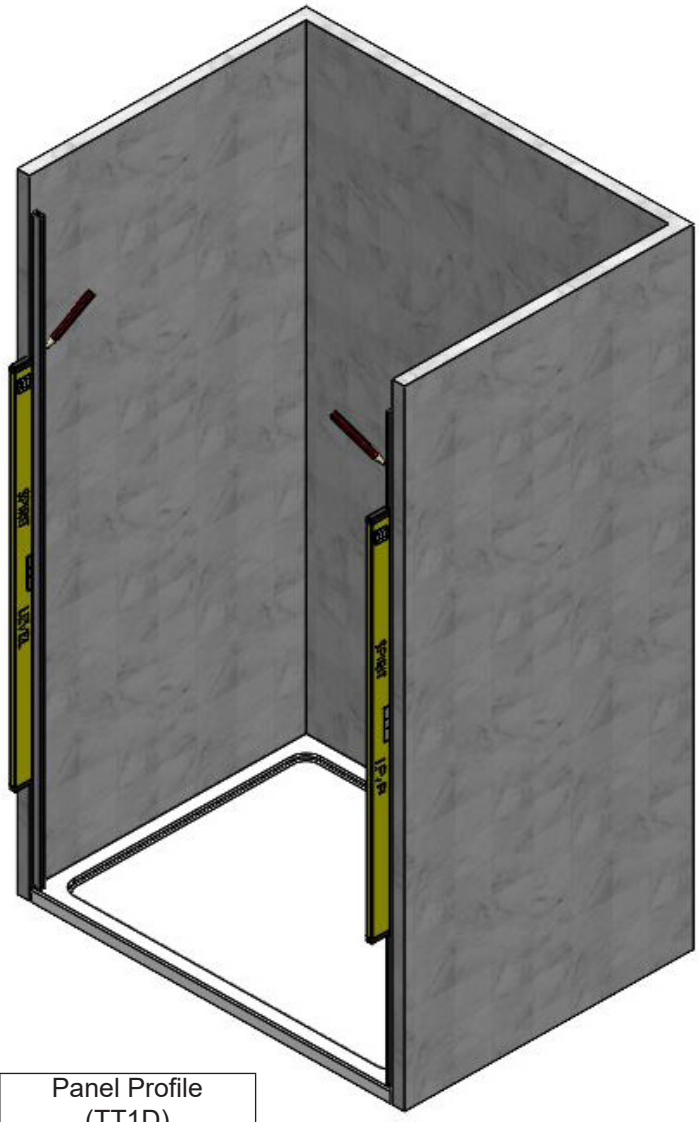

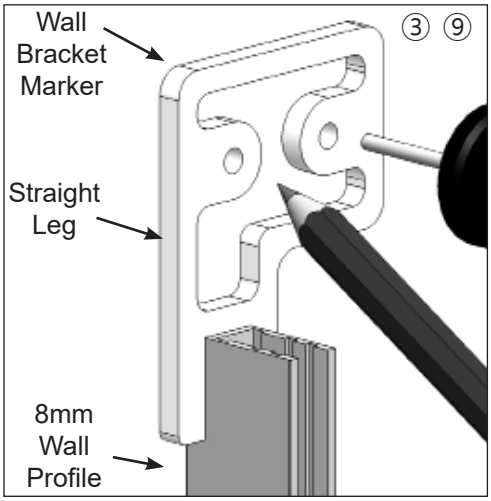

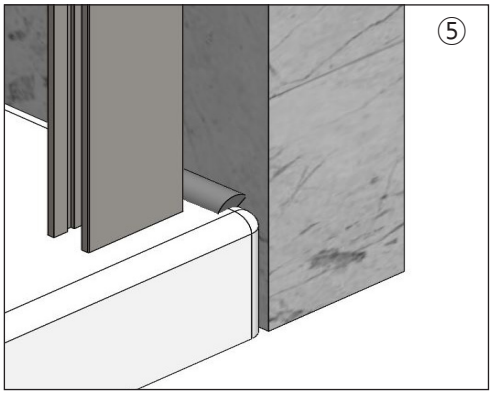

Panel Profile (KT1D) Y Dimension	Panel Profile (TT1D) Y Dimension
12mm	10mm

Product Code	Panel Profile X Dimension	Door Profile X Dimension
KT1D	8mm	10mm
TT1D	10mm	10mm

1. Depending on the product purchased, use the above tables to determine the distance (Y) to place the Wall Profiles in from the front of the tray. Using a spirit level keep it completely vertical then with a pencil carefully mark the wall through the holes in the Wall Profile.
2. Drill the walls (10 holes) with a 6mm masonry drill (not supplied), remove the Masking Tape and any debris.Fit the Wall Plugs.
3. Temporarily fit the Door Wall Profile to the side where the door will close onto ensuring it is completely vertical. Place the Wall Bracket Marker (Red marker for narrow profile, Blue for the wider profile), onto the top of the Wall Profile and up against the wall. Position it so that the long straight leg is on the outside. Mark the wall through the two holes onto the wall.
4. Remove the Door Wall Profile you temporarily fitted.
5. Apply a bead of sealant the width of both Wall Profiles where they meet the top of the tray and the tiled wall.
6. Place the Wall Fixing screws into the holes into both Wall Profiles.
7. Fit the Door Wall Profile to the side where the door will close onto. Line up the screws with the holes in the Wall and tighten all the screws. Fit the Panel Wall Profile in the same manner.
8. Check that both Wall Profiles have remained vertical, adjust if necessary.
9. Place the Wall Bracket Marker onto the top of the Panel Wall Profile and up against the wall. Position it so that the long straight leg is on the outside. Mark the wall through the two holes onto the wall. Drill the wall with a 6mm masonry drill (not supplied) for the Top Rail Brackets. Fit the Wall Plugs and remove any debris.

Step 4 - Fitting the Wall Brackets

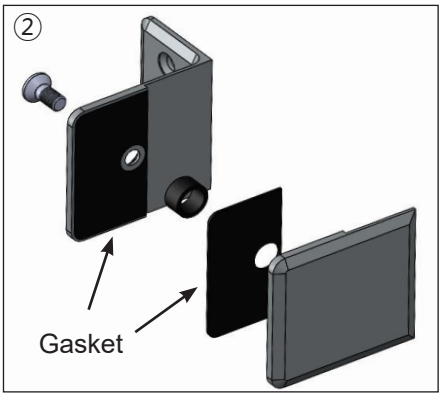

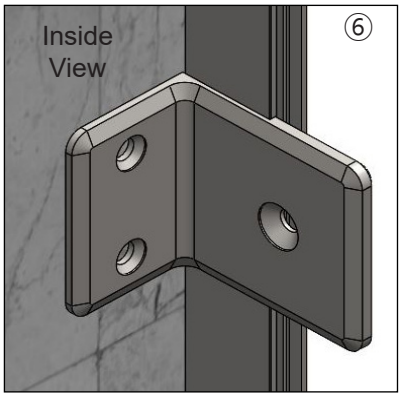

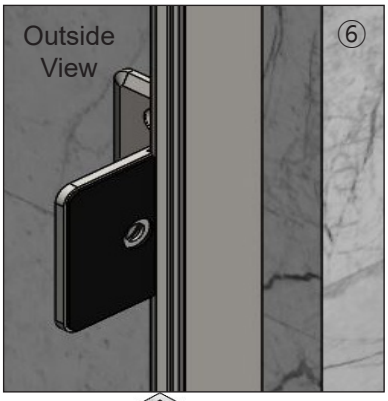

1. Fit <u>ONE</u> of the Top Rail Wall Brackets only above the Panel Wall Profile to the wall at this stage.
2. Dismantle the Panel Wall Brackets and fit onto the Panel Glass ensuring that all gaskets are fitted. Ensure that the brackets are fitted the correct way (screws to the inside).
   - **IMPORTANT: If you have have purchased a product with a print, please ensure you fit the print on the outside.**
   - **IMPORTANT: There is a long and a short side to the "U notch" in the glass, please ensure that the <u>Short Side</u> is at the <u>TOP</u> of the glass.**
3. Carefully lift the Panel into the Panel Wall Profile and up to the wall.
4. Mark the wall through the holes in the Brackets using a pencil.
5. Drill the wall with a 6mm masonry drill (not supplied). Fit the Wall Plugs and remove any debris.
6. Remove the brackets from the Panel and fasten the inside bracket to the wall and over the Wall Profile.

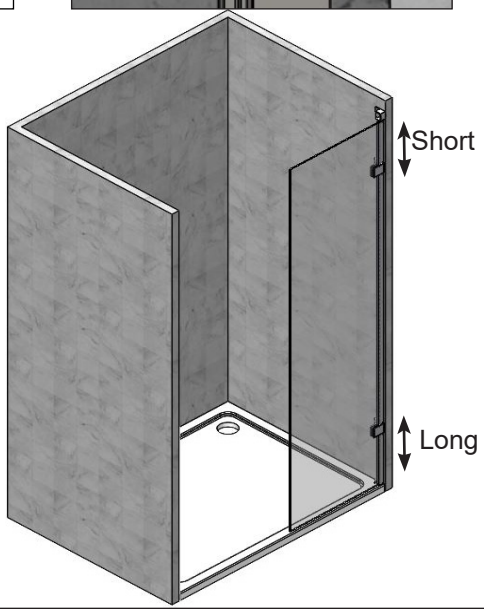

Step 5 - Top Rail and Panels

IMPORTANT: Use the table below for STANDARD PRODUCTS ONLY. If you have purchased a bespoke product then DO NOT USE THE TABLE. To get the “A” dimension measure the width of the Door Glass and add 12mm. Note: We recommend 2 people carry out the procedures below.

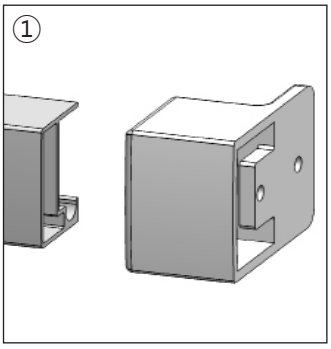

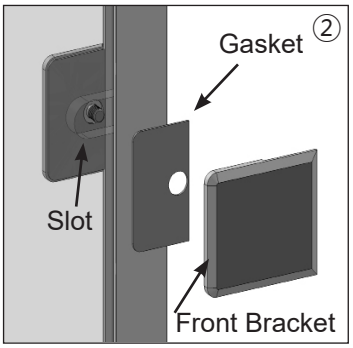

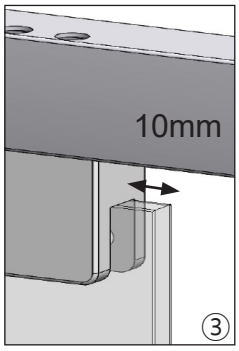

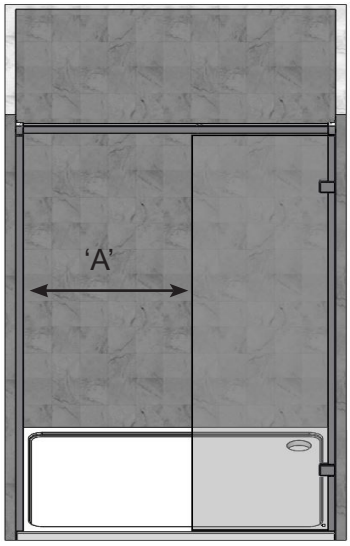

1. Slide the remaining Top Rail Wall Bracket over the Top Rail at the correct end. Insert the Top Rail into the already fixed Top Rail Wall Bracket. At the other end align the loose Top Rail Wall Bracket to the predrilled holes in the wall and fully secure to the wall. Place the Top Rail centrally between the brackets and secure.
2. Carefully place the Panel glass through the Glass Clamp and into the Panel Wall Profile then attach the front of the Wall Brackets to the already fitted Brackets and tighten all the screws, ensure the gaskets are placed between the Brackets and glass. Place the Branding Badge to the top of the Panel Glass.
   - **NOTE: Tighten the screws enough to hold the Panel, you may need to adjust the Panel at a later stage.**
3. Adjust the Panel Glass until you have the correct gap "A" (End of Panel Glass to front of 10mm Wall Profile) for your product. Ensure the Panel Glass is completely vertical (Gap may vary because of Wall Lean).
4. Ensure that the Glass Clamp is 10mm away from the Glass Edge as shown then tighten the Glass Clamp screws onto the glass ensuring that the gaskets are in place.

Product Code	Gap Between Panels ‘A’
KT1D12 / TT1D12	622mm
KT1D14 / TT1D14	722mm
KT1D15 / TT1D15	727mm
KT1D17 / TT1D17	827mm

Step 6 - Fitting the Door

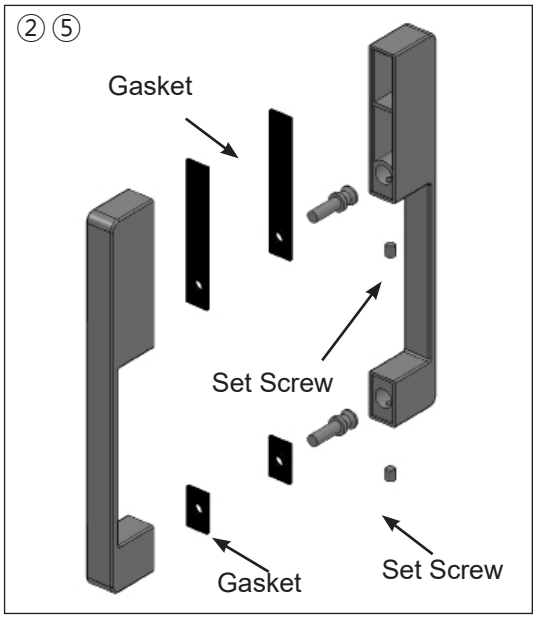

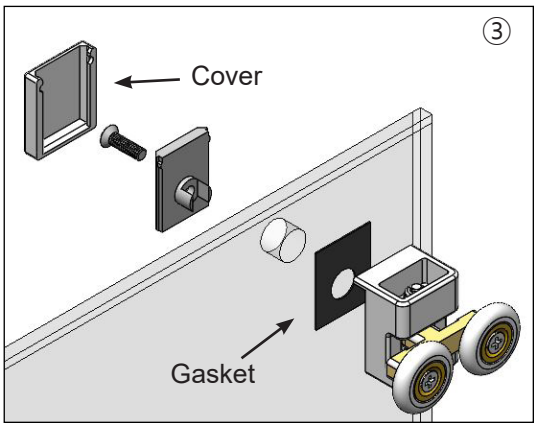

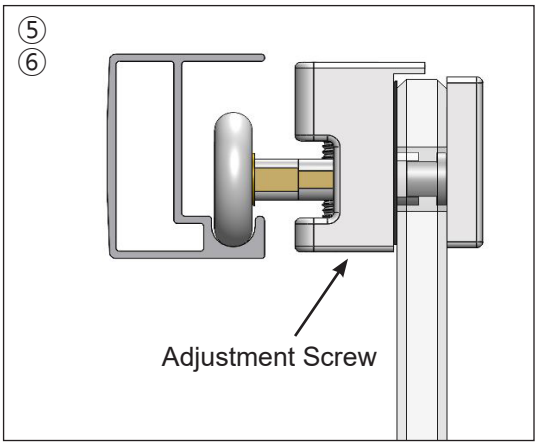

End Moulding

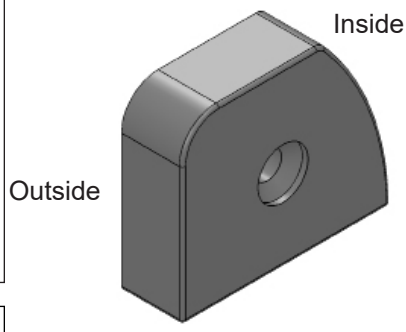

Bottom Door Guide

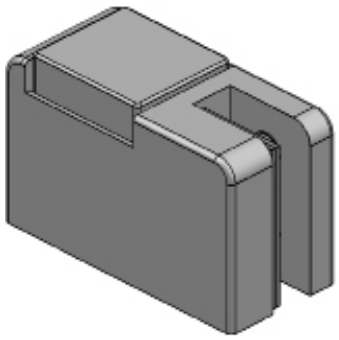

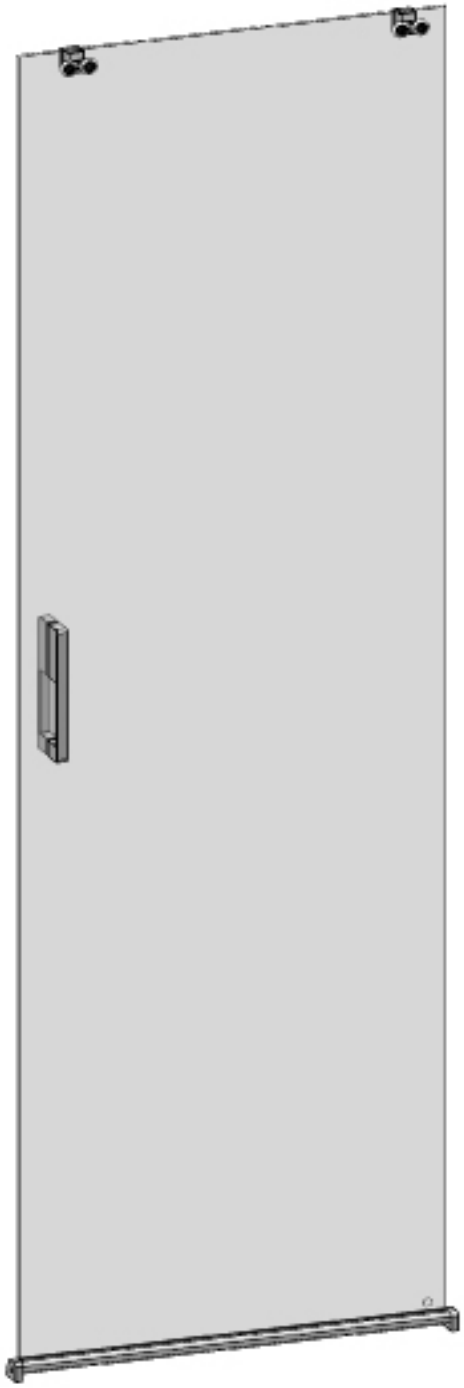

1. Place the Door assembly onto a level scratch free surface, ensure you have them the correct way round.
   - **IMPORTANT: The outside of the Door has the flat face of the end mouldings, the inside has the curve.**
   - **IMPORTANT: If you have have purchased a product with a print, please ensure you fit the print on the outside.**
2. Remove the handle from the packaging, using the Allen Keys (supplied) remove the screws and split the handle assembly. Fit onto the door glass ensuring the Set Screws are on the inside of the enclosure.
3. Carefully dismantle the Bearing Assemblies, place the gasket on the outside of the glass (Bearing Side) then re-assemble onto the Door Glass ensuring that the wheels are on the outside of the glass.
   - **IMPORTANT: Fit the Bearing Assemblies to the door using a hand screwdriver only (DO NOT use a Drill).**
4. Fit the Bottom Door Guide onto the bottom of the Panel Glass. Adding or removing the gaskets can help with how the Door hangs.
5. Carefully place the assembled door inside the tray. With the Door the correct way round offer the Bearings into the top Horizontal Rail. When in position carefully lower the Door and press the plunger down on the Door Guide assembly to allow the bottom rail to go over, release the plunger.
   - **NOTE: When fitting, offering the door at a slight angle will make it easier to fit into the rail.**
6. There is a screw in the Bearings for adjustment purposes, adjust as necessary to align the Door.
7. When satisfied with the fitting of the Door fit the Inner Bearing Covers.

Step 7 - Magnets and Bottom Rail

NOTE: This product can be used with or without the Bottom Rail.

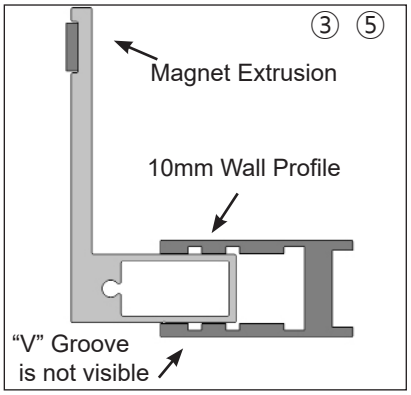

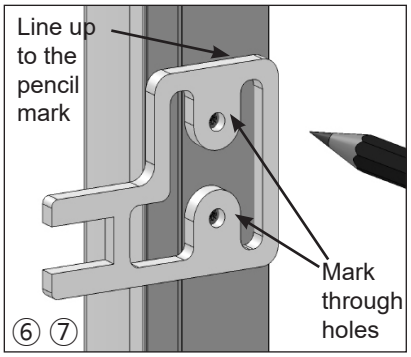

Door Magnet

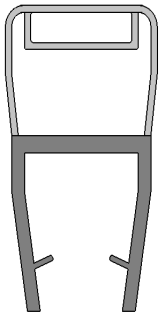

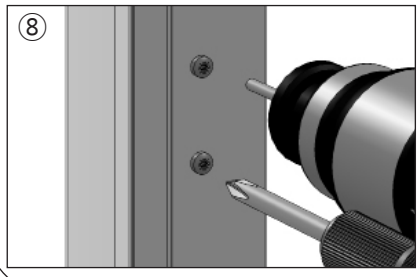

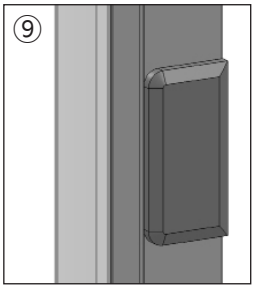

1. Attach some Masking Tape to the front of the Door Wall Profile in the areas opposite the Wall Brackets.
2. Fit the Door Magnet onto the Door Glass and down onto the end moulding at the handle side.
3. Place the Magnet Extrusion into the Door Wall Profile and put the Bottom Rail into the Bottom Door Guide.
4. Pull the Magnet extrusion out until it butts up to the Bottom Rail, let the magnets make contact.
5. Check that the "V" Groove on the Magnet Extrusion is NOT visible. If the "V" Groove IS visible then you need to adjust the position of the Panel (as stated in Step 4) to make sure the "V" Groove is not visible.
   - **VERY IMPORTANT: If the "V" Groove is visible then the Seal Carrier Profile will <u>NOT</u> be able to be secured.**
6. Place the top of a Spirit Level to the top edge of a Wall Bracket keeping it horizontal. Position the level so it is over the Masking Tape then draw a line using a pencil, do the same for the other Wall Bracket.
7. Place the the top edge of the Wall Marker on the line on the Masking Tape, ensure that the Wall Marker is pushed fully up to the wall. Mark through the two holes onto the Masking Tape. Repeat for the other.
8. Ensure the Magnet Extrusion is still parallel to the Door Glass and the "V" Groove is <u>NOT</u> visible. With the 2.5mm drill bit (supplied) drill through the Wall Profile accurately into the Magnet Extrusion. Remove the Masking Tape and secure the Profiles together using the 9mm Cap Head Screws (supplied)
9. Remove the Release Paper from the back of the False Covers, Position so the top edge is in line with the top of the Wall Brackets. Place them so they touch the wall then attach to the Wall profile.
10. Fit the Top Cap onto the Magnet Extrusion with the 9mm Countersunk Screw.

Step 8 - Seals and Sealing

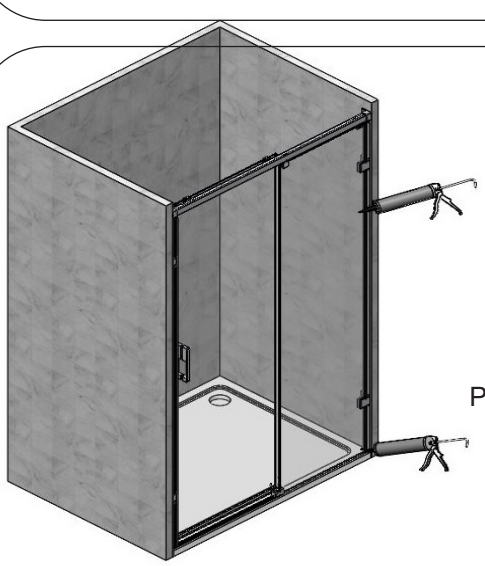

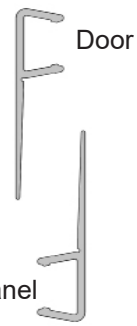

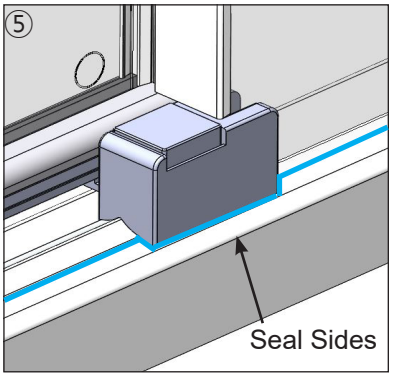

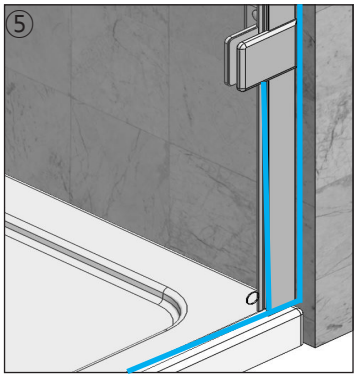

1. Fit the longer Flipper Seal to the outside of the Door ensuring the flipper faces towards the outside making sure that it sits fully down onto the Door Bottom Rail and Moulding.
2. Fit the shorter Flipper Seal to the end of the Panel glass ensuring the flipper faces towards the inside and sits fully on top of the Door Bottom Guide.
3. If you ARE going to use the Bottom Rail then remove the backing from the self adhesive strip from the underside of the Rail. Place one end into the fixed Bottom Door Guide and stick down aligning it with the Magnet Extrusion.
4. If you have used the Bottom Rail seal the base of the enclosure to the top of the tray from wall to wall on the <u>outside only.</u>
5. If you have chosen NOT to use the Bottom Rail then seal the base to the tray and the sides of the Bottom Door Guides.
6. Seal the Wall Profiles up all the way from the tray on the inside and outside.
7. On the Panel Side, between the Glass and the Wall Profile seal up to the first Bracket.
8. Fit all the Top Caps.
   - **Do not seal along the base on the inside, failure to comply may result in leakage.**
   - **IMPORTANT: Failure to follow stages 4,5,6 and 7 may result in serious water damage and is not covered under the terms of the guarantee.**
   - **Please allow 24 hours for the sealant to fully cure before using the enclosure.**

Trouble Shooting Guide

Should you experience any problems during installation please refer to the Trouble Shooting Guide or contact Customer Relations on:
+44 (0) 1325 328033

To enable customer relations to provide you with an excellent level of service it is important that you quote your product Code and Reference Number - these can be found on the Guarantee card.

Problem	Solution
Leaking	1. Check the tray is sealed correctly along the tiled walls prior to installation. 2. Check that the inside gap between the Tray and Wall profiles has been sealed correctly. 3. Check the base of the enclosure is sealed on the outside only. 4. Check that a bead of sealant the width of the Wall Profile has been applied. 5. Check all the seals have been cut and positioned correctly. 6. Has the Bottom Rail been fitted, if not then fit for better water integrity. Important: This enclosure should be water tested conforming to BS EN 14428
Enclosure Alignment on Tray	1. Have you read and understood Step 1 of the instructions? 2. Is the enclosure fitted onto a tiled wall? 3. Are both Wall Profiles completely vertical? 4. Are both Wall Profiles set in by the same amount?
Door not running smoothly	1. Ensure both Wall Profiles are completely vertical. 2. Ensure the tray is completely level. 3. Check the Bearings have been adjusted correctly.
Door Alignment	1. Ensure the Wall Profiles are completely vertical. 2. Ensure you have read and understood Step 1 of the instructions. 3. If the door is not aligned correctly, you have adjustment in the top wheel assemblies. 4. The Door Magnets can be moved off the Door Glass slightly to correct any gaps.

Important Information to help you maintain your Product:

The following information is all you need to keep your product looking new.

Our products are generally maintenance free, however it may be necessary to lubricate wheel assemblies and other moving parts such has hinges from time to time.

Clean your product using a mild detergent diluted in water and then polished off using a soft cloth.
If you live in a hard water area, periodically clean your product using a 50/50 solution of white vinegar and water. The solution should be left on the enclosure for approximately 5 minutes then rinsed off using warm water. This method of cleaning should remove lime scale residue.
It is strongly recommended that a quality silicone spray is used.

A list of Donts

1. Don't use acidic based products which are unsuitable for cleaning enamel surfaces.
2. Don't use abrasive cleaners or cleaners using bleach or solvents, these products will adversely affect the finish of the aluminium profiles.
3. Don't use scouring pads, powder or any sharp instruments when cleaning the enclosure.