Haven6
Sliding Door
H3S#

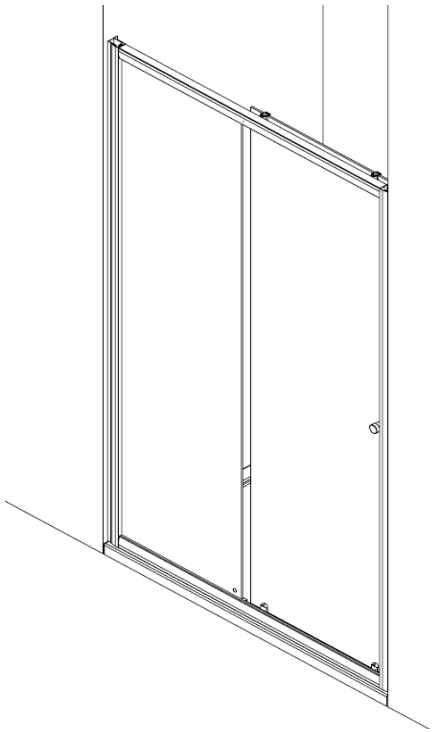

Handling

Be aware toughened glass can shatter if not handled correctly. It should not be subjected to any sharp impact and it is essential to protect the glass by resting it on a soft protective surface during installation such as cardboard or carpeting. It is recommended to wear PPE at all times during installation.

Pre-Installation Checks

1. Please take time to read these instructions prior to installing your product, including the Tray Sizes section below.
2. Check you have the correct product, by looking at the labels on the side of the product packaging.
3. Check all the product components and fixing kits are in the box - these are listed on the next page.
4. Please check the product for defects or damage, once the installation has commenced we cannot accept responsibility for any defects or damage.
5. Before you commence any drilling check there are no hidden electrical cables and/or water pipes.
6. No attempt should be made to re-work the toughened safety glass.
7. The installation of the product should be performed by two persons.
8. It is strongly recommended the product is fitted on a tiled surface or similar waterproof surface - which are tiled and grouted before product is installed.
9. It is strongly recommended that the walls the product is going to be installed on are vertical, and the floor/tray is level.
10. Please note that some natural misting may occur when you remove this product from its packaging, due to the addition of the glass protection pre-coating. If this does occur this can easily be removed with a soft, dry cloth.

Tray Sizes

Important: You MUST measure your tray before you proceed with installation. Please refer to the adjustment stated in the brochure or Step 1 of this instruction manual for the adjustment details for Haven6. If your tray exceeds this given value, you may need a bespoke product. T Your Tray must be larger than the size given for Corner Adjustments.
Refer to Step 1 for a guide on how to measure your tray accurately before proceeding any further - Roman will not be liable if you begin installation without correctly measuring your tray, to the realisation it doesn't fit.

Consumer Guarantee

Please make sure the purchaser/end user completes and returns the guarantee card which is enclosed with this product. Failure to validate the Guarantee will mean only the 1 Year Statutory Guarantee will apply.

PO Box 125, Whitworth Avenue,
Aycliffe Business Park,
Co Durham DL5 6WX

To obtain a copy of the Declaration of Performance for this product, please go to: www.ce-dop.com, contact us on +44 (0) 1325 328034, or write to us at the above address, quoting the product reference number where possible.

REV07 - 08.2023

Equipment Checklist: Not Supplied

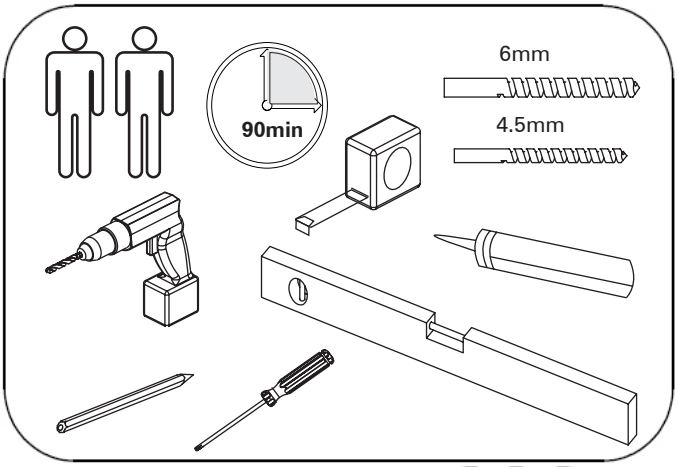

Fixing Kit Components

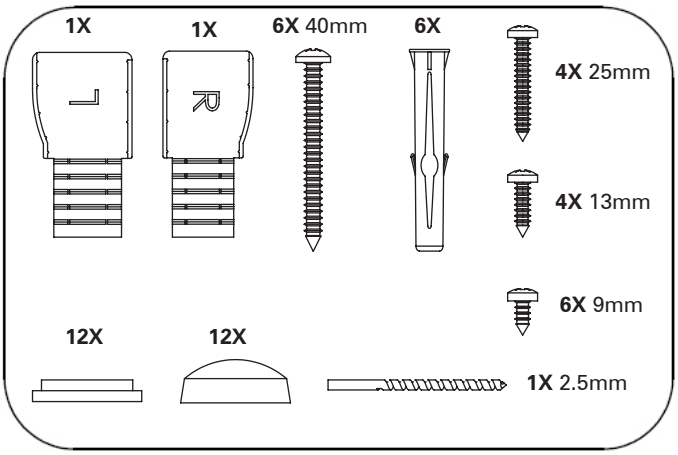

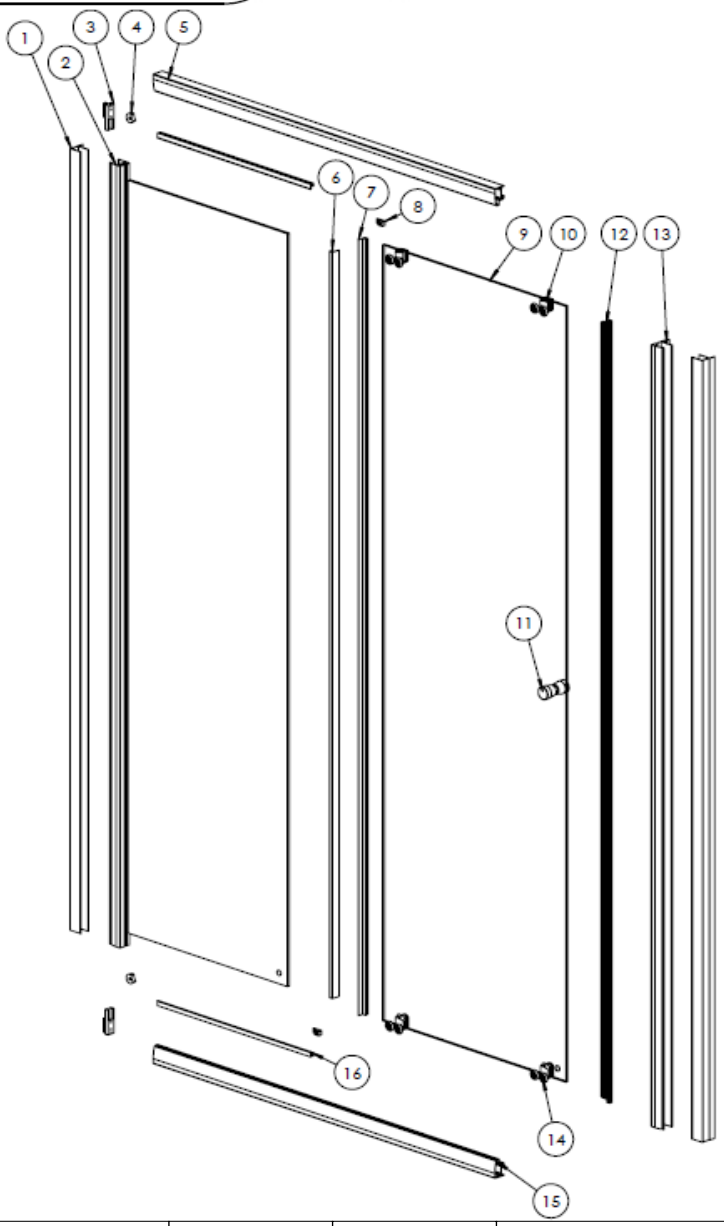

No.	Description	Qty.	No.	Description	Qty.
1	Wall Profile	2	11	Door Handle	1
2	Keyslot Panel Assembly	1	12	Magnet Pairing	1
3	Transit Block	2	13	Vertical Alumnium	1
4	Door Stop	4	14	Bottom Bearing Assembly	2
5	Top Rail	1	15	Bottom Rail	1
6	Panel Seal	1	16	Panel to Rail Seal	2
7	Door Seal	1			
8	Glass Clip	2			
9	Door Glass	1			
10	Top Bearing Assembly	2			

Step 1 - Tray Sizes

Your area must be tiled and grouted before measuring your tray - refer to your tray installation instructions and ensure this is done correctly. This is because tray measurements are taken from the tiled wall. Once tray installation is complete you can proceed to measuring the area, measure the bottom, middle and top across a 1900mm height. The tables below show the range of tray widths which will allow for correct fitment - this is for standard products only.

Alcove:

For Bespoke products please refer to your customer drawing for the MID Adjustment of the Door, this is the required Alcove size.

Corner:

For Bespoke products please refer to your customer drawing for the MID Adjustment of the Door, and add 10mm. For The Side Panel, please refer to the Side Panel Fitting instructions.

Alcove Door Code	Tray Width
H3S10CS	940mm - 990mm
H3S11CS	1040mm - 1090mm
H3S12CS	1140mm - 1190mm
H3S13CS	1240mm - 1290mm
H3S14CS	1340mm - 1390mm
H3S15CS	1440mm - 1490mm
H3S16CS	1540mm - 1590mm
H3S17CS	1640mm - 1690mm

Corner Door Code	Tray Width
H3S10CS	986mm - 1027mm
H3S11CS	1086mm - 1127mm
H3S12CS	1186mm - 1227mm
H3S13CS	1286mm - 1327mm
H3S14CS	1386mm - 1427mm
H3S15CS	1486mm - 1527mm
H3S16CS	1586mm - 1727mm
H3S17CS	1686mm - 1727mm

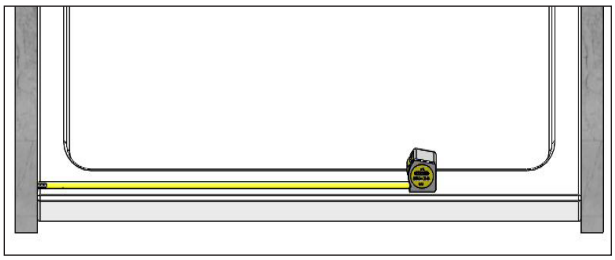

Measure from one tiled wall to the other.

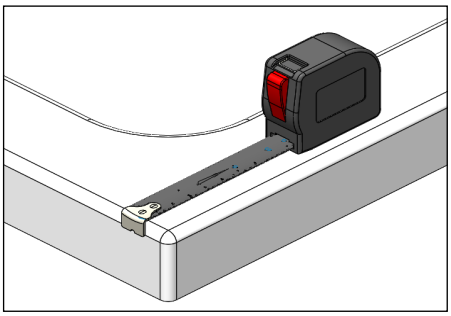

Measure from the very outside of the tray - before the radius. Go all the way to the tiled wall.

If your tray exceeds the given amount for your product size, you may need a bespoke product.

Step 2 - Pre-Installation Checks

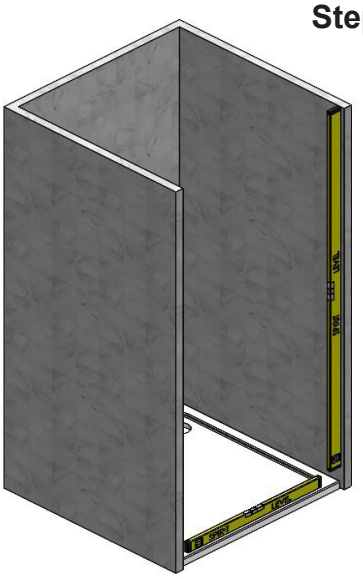

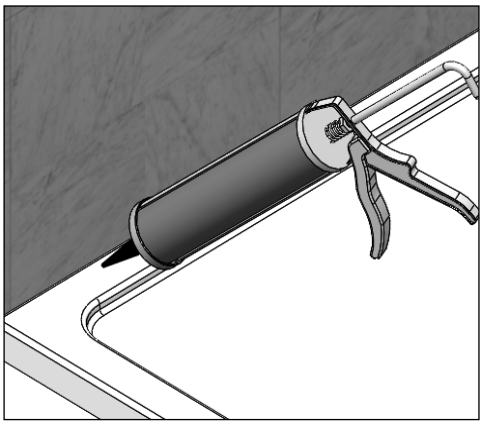

1. Make sure the tray is installed as per the manufacturer's instructions.
2. Check your Tray and Walls are level on all sides (the bubble on the spirit level must be in the centre of the 2 lines).
   - If the Walls & Tray are not level you will not achieve the +/- 12.5mm of adjustment in each profile.
3. Stand in the tray and check that there is no adverse movement (correct if necessary).
4. The walls should be tiled and grouted up to the tray.
5. The tiles and the tray should be sealed using a good quality bathroom sealant:
   - Spray the seal and joints with the shower head and check for leaks when the silicon has cured.
   - Check the plumbing for leaks.
   - DO NOT plasterboard over the tray.
   - DO NOT grout the tiles when the enclosure has been fitted, the grout may discolour the aluminium profiles.

Step 3 - Wall Profile Positioning

1. On both wall profiles drill three 4.5mm holes through the lip. Place them 7mm in from the edge and approximately 100mm from each end and the other positioned in the centre.
   - **Drill the holes from the back (through the face that goes to the wall) - deburr all holes.**
2. Place both Wall Profiles 10mm in from the outside of the tray. Make sure that both Wall Profiles are completely vertical using a spirit level and mark the wall through the holes with a pencil.
3. Drill the wall with a 6mm Masonry Drill Bit (not supplied) where the Wall Profiles are to be positioned. Fit the Wall Plugs supplied (if going in to a brick or block wall). If going into a plasterboard wall you will need to purchase appropriate wall fixings. Wipe clear all debris from the Tray before referring to the next stage.
4. Take one Wall Profile and position it on the Tray, place a bead of Bathroom Sealant (not supplied) the width of the Wall Profile between the tiled wall and tray. Fit Screw Bases to the 40mm screws (supplied) and secure the Wall Profile to the wall. Do not over tighten the screws into the Wall Profile as this will misshape the Wall Profile. Ensure the Wall Profile stays completely vertical throughout this procedure using a Spirit Level.
   - **NOTE: Only one Wall Profile is fitted at this time, the other Wall Profile is fitted later.**
   - **NO sealant should be present between the Wall Profiles and the tiled walls vertically prior to screw fixing.**
5. Seal the gap between the Tray and Wall Profile with a Bathroom Sealant (not supplied).
   - **Failure to carry out Stages 4 & 5 can result in serious water damage and is not covered by the Guarantee.**

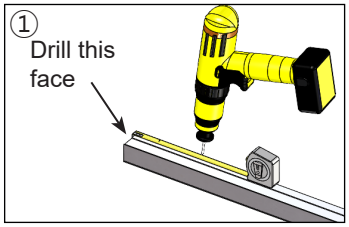

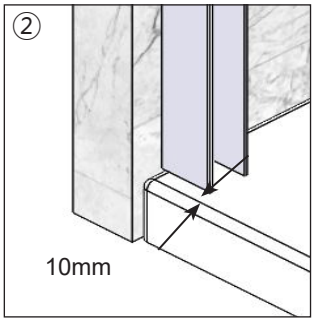

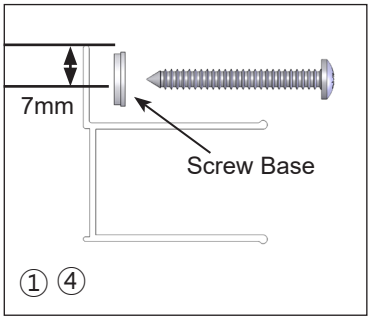

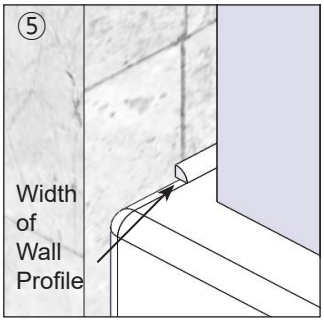

Step 4 - Building the Framework

1. Before proceeding with this assembly remove the Plastic Transit blocks from the top and bottom of the Panel Assemblies and discard.
2. Place the Panel Horizontal Rail Seals onto the top and bottom of the Panel Assemblies.
3. Make sure that the seals are placed onto the glass the correct way round with the long side running vertically up the glass. The seals must also be pushed fully up to the vertical aluminium extrusion bonded onto the glass.
4. Screw the Long Screw (25mm) in the glass panel side of the horizontal rail and screw the short screw (13mm) in the door vertical aluminium side.
   - **IMPORTANT: Please use lubricant and a hand screwdriver to NOT over stress the screws.**
5. Following the fast fix system steps as shown below, slot the horizontal rail into the keyslot holes on the panel assembly vertical aluminium, drop it into position and adequetly tighten. Repeat with the other horizontal rail followed by the door vertical aluminium on the opposite side .
   - **IMPORTANT: Use a hand screwdriver in order to NOT over stress the screws.**
6. Secure the glass to the Horizontal Rails by tightening the glass clips, being careful not to overtighten.
7. Seal the gaps in the rail clips with silicon sealant to prevent leaking from this area.

NOTE: Clear area in front of the shower tray in which to assemble product prior to it being installed.

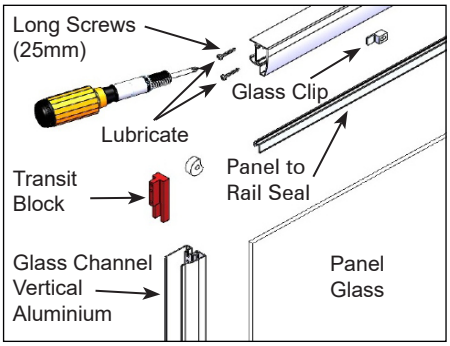

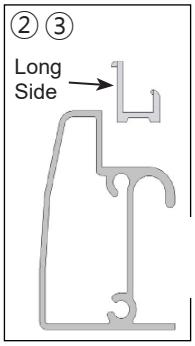

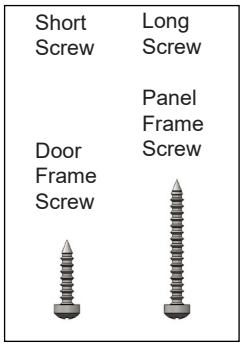

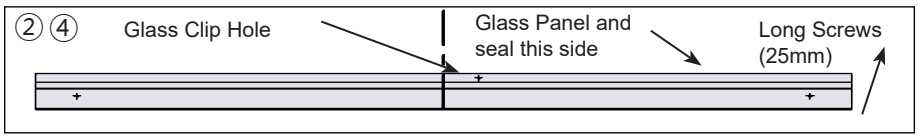

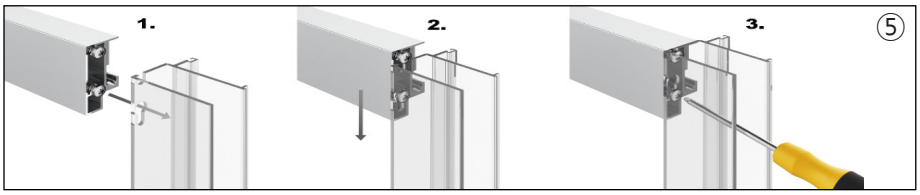

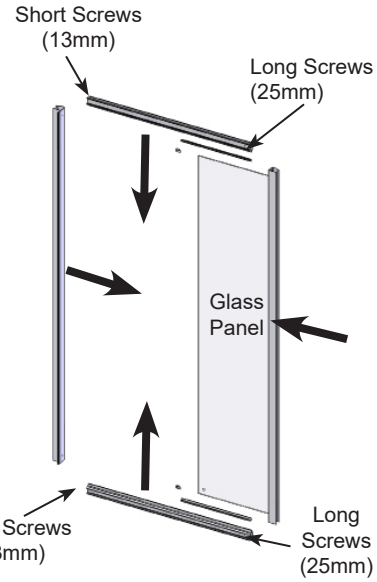

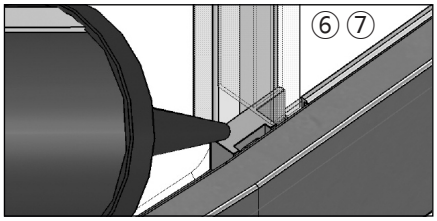

Step 5 - Positioning the Door & Second Wall Profile

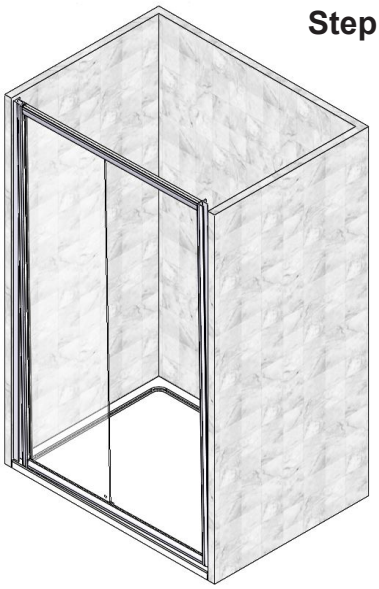

1. Place the remaining Wall Profile at the required end of the Door.
2. Gently lift the Door and Wall Profile onto the tray and into the already fixed Wall Profile.
3. Where the unfixed Wall Profile will meet the tiled wall and tray apply a generous bead of sealant.
4. Position the Wall Profile so that it locates over the previously fitted wall plugs.
5. Fit Screw Bases to the 40mm screws (supplied) and secure the Wall Profile to the wall. Do not over tighten the screws into the Wall Profile as this will misshape the Wall Profile. Ensure the Wall Profile stays completely vertical throughout this procedure using a Spirit Level.
6. Position the Door equally between the Wall Profiles, there must be at least 10mm left for fixing.

NOTE: This part of the installation requires 2 people.

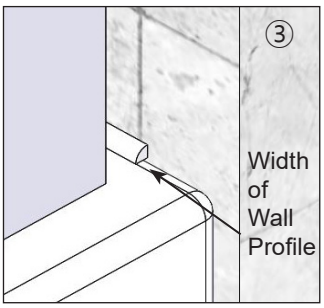

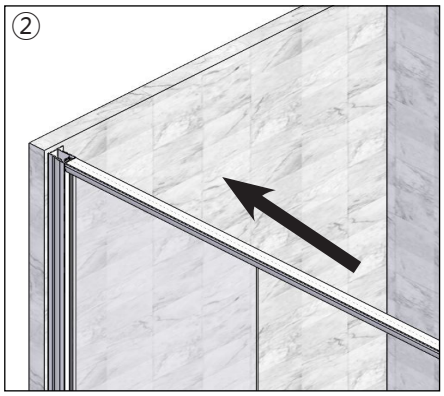

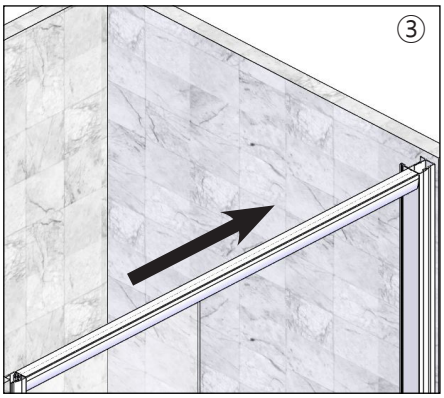

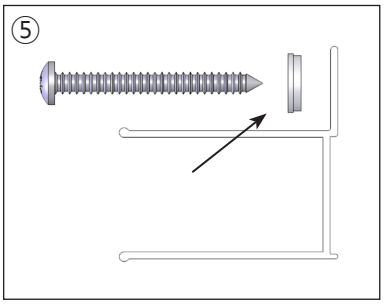

Step 6 - Fitting the Enclosure

1. Make sure the Frame is positioned equally between both Wall Profiles with a minimum of 6mm for drilling.
2. Ensure the Panel Glass is completely vertical using a Spirit Level (The bubble should be in the centre of the 2 lines).
3. Drill three 2.5mm holes through the Vertical Frame of the Door into the Wall Profiles, they are to be drilled approximately 50mm from each end with the other in the centre.
4. Fit the Screw Bases onto the 9mm Screws and screw the Door to the Wall Profiles using a screwdriver.
5. Fit all the Screw Cover Caps in the enclosure.

NOTE: This part of the installation requires 2 people.

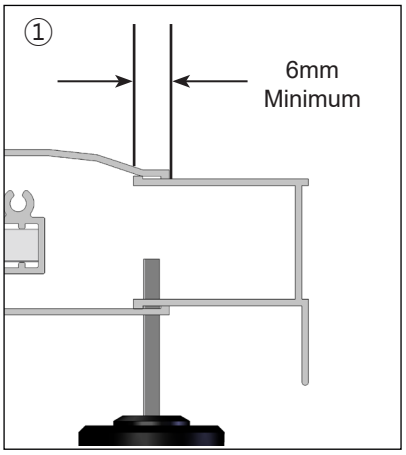

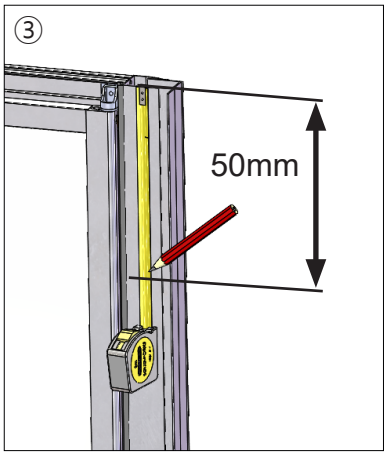

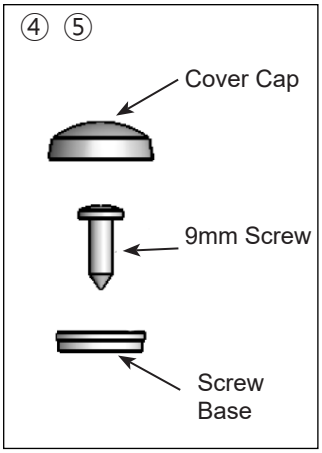

Step 7 - Assembling the Door

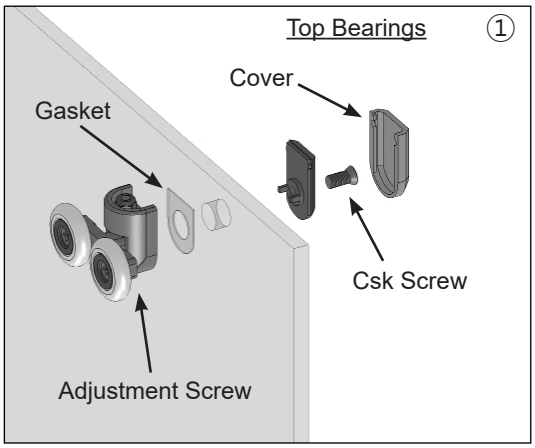

1. Carefully dismantle the Bearing Assemblies, place the gasket on the outside of the glass (Bearing Side) then re-assemble onto the Door Glass. Make sure you have the correct bearings at the top and bottom and that the wheels are on the outside of the glass.
   - **IMPORTANT: Fit the Bearing Assemblies to the door using a hand screwdriver only (Do NOT use a Drill).**
   - **NOTE: The bottom bearings have a domed plunger.**
2. Dismantle the Handle Assembly and re-assemble onto the Door Glass. Make sure the Hole Bush is fitted between the screw and glass and the Black Gasketsare fitted each side of the Door.
3. Fit the Vertical Door Seal to the Door Glass, the soft flipper section to face the outside.
4. Fit the Magnet to the Handle side of the Door Glass.

NOTE: The Bearing Assemblies for the top and bottom are different and can be distinguished by the bottom bearings having a domed plunger.

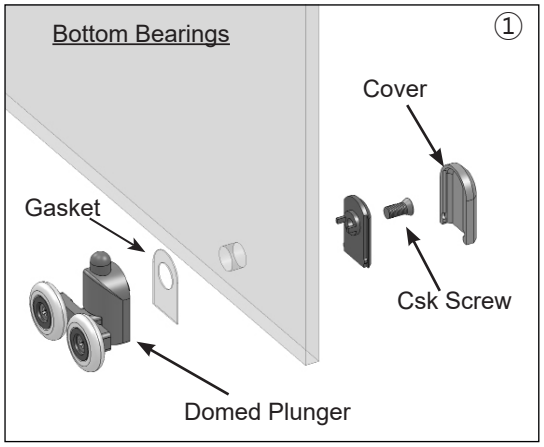

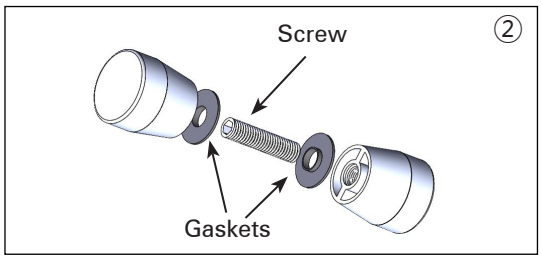

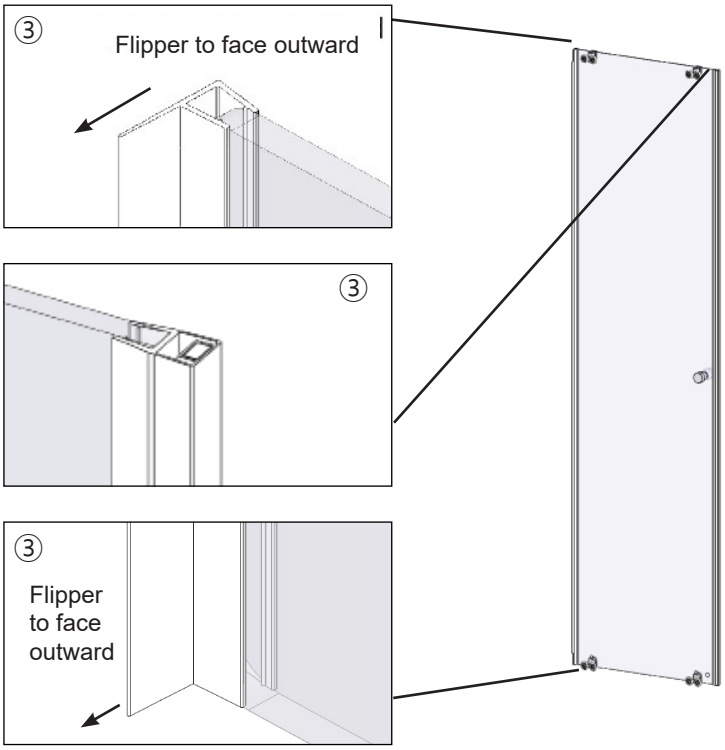

Step 8 - Fitting the Door

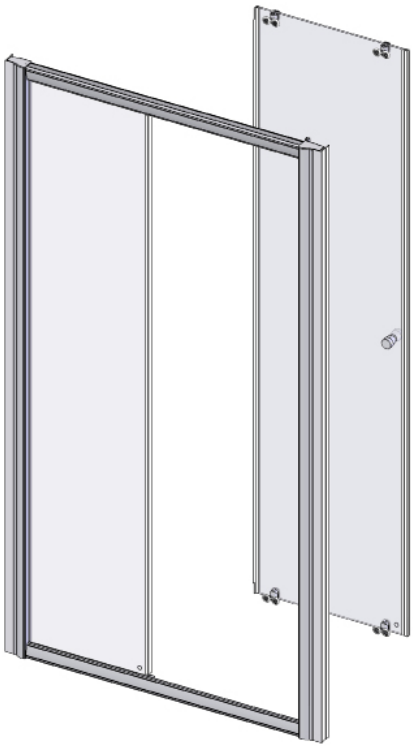

1. Carefully lift the assembled door into the enclosure ensuring that it is the correct way round.
2. Position the top Wheel Bearings into the Horizontal Top Rail (you may need to have the Door at a slight angle) and drop the Door gently down.
3. Push down the spring loaded Domed Plunger on the bottom Wheel Bearings and push under the Horizontal Bottom Rail

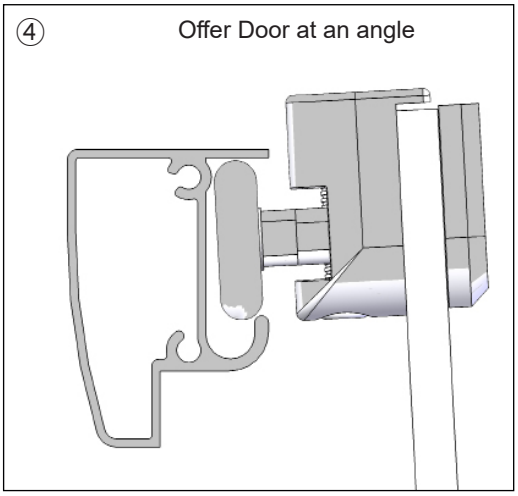

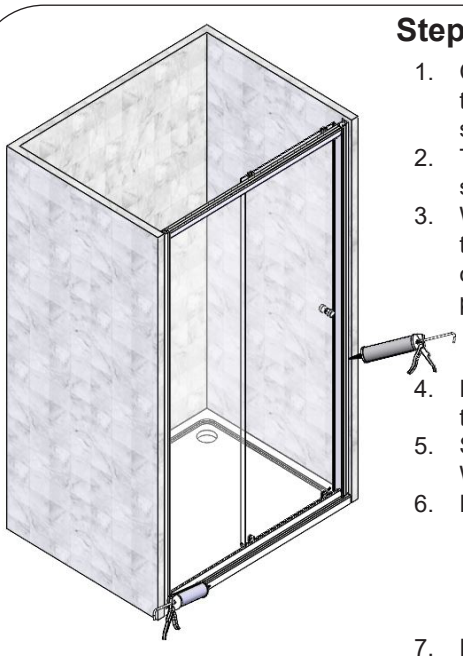

Step 9 - Door Adjustment and Sealing

1. Close the Door and check that the Magnets meet each other along the full length, also check that the Door is running smoothly. The Door Magnet can be pulled away from the glass slightly to help with the door closure.
2. The Door can be adjusted by turning the Screws on the Top Bearing Assemblies using a screwdriver. Turn the screws up or down until you are satisfied with the Door.
3. With the Door adjusted rotate the Door Stops until they just make contact with the wheel of the bearing when open, this to prevent excessive movement and rocking. The Door Stops can be rotated so that the wheel contacts either the outer part, the half moon section or the point (see diagrams).
   - **IMPORTANT: Adjust the Door Stops top and bottom, failure to do so may result in breakages.**
4. Fully seal horziontally between the top of the Bottom Horizontal Rail and the Panel Glass on the outside.
5. Seal both sides of the Wall Profiles vertically inside and outside where they meet the tiled Walls.
6. Fully seal the Bottom Horizontal Rail to the top of the tray on the outside only from wall to wall.
   - **IMPORTANT: Failure to carry out stages 4,5 and 6 may result in serious water damage and is not covered under the terms of the guarantee.**
   - **DO NOT seal the base of the product to the inside, failure to comply may result in the product leaking.**
7. Fit the Top Caps, these can be shortened to fit by snapping off at the relevant groove. Apply a small amount of silicon to the underside to help keep in place
8. Please allow 24 hours for the sealant to cure prior to using the enclosure.
9. Place the branding badge in a prominent position on a none moving part of aluminium.

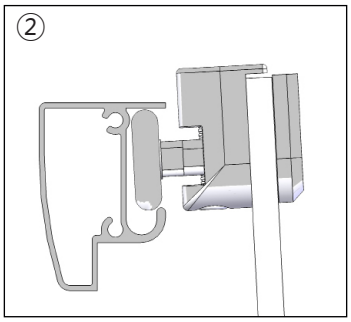

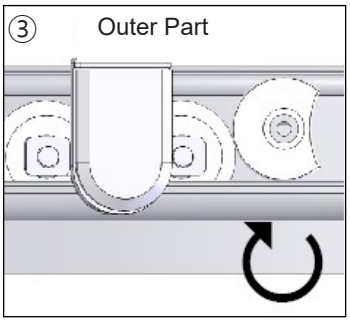

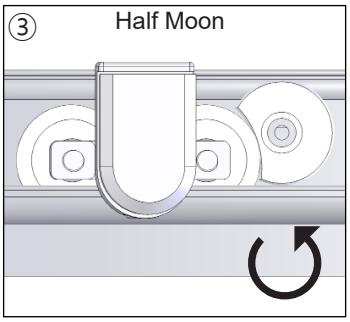

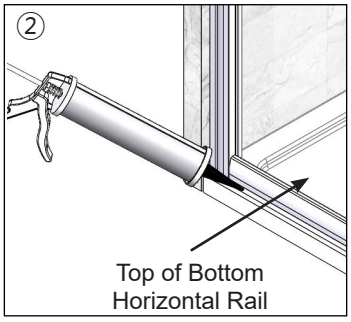

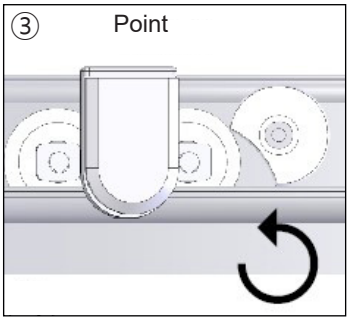

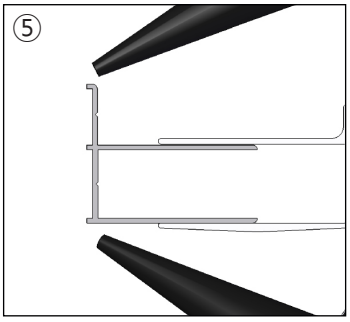

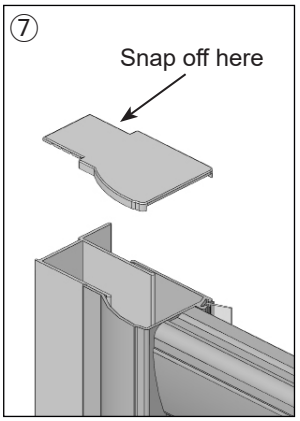

Trouble Shooting Guide

Should you experience any problems during installation please refer to the Trouble Shooting Guide or contact Customer Relations on:
+44 (0) 1325 328033

To enable customer relations to provide you with an excellent level of service it is important that you quote your product Code and Reference Number - these can be found on the Guarantee card.

Problem	Solution
Leaking	1. Check that the inside gap between the Tray and Wall profiles has been sealed correctly. 2. Ensure the tray is sealed along the tiled walls prior to installation. 3. If the inside joint between the enclosure and the tray top is sealed, this will cause leakage - sealant must be removed. 4. Ensure the wall profiles on the tiled walls are sealed both vertically inside and outside. 5. Ensure the Panel Glass and the top of the Bottom Horizontal Rail is sealed horizontally. 6. Ensure the joint between the enclosure and tray top is sealed. 7. Ensure the Door Magnets meet fully all the way down. Important: This enclosure should be water tested conforming to BS EN 14428
Enclosure Alignment on Tray	1. Have you read and understood Step 1 of the instructions? 2. Is the enclosure fitted onto a tiled wall? 3. Is the wall profile completely vertical? 4. Is the wall profiles fitted 10mm from outside of the tray?
Door not operating correctly	1. Ensure both Wall Profiles are completely vertical. 2. Ensure the tray is completely level. 3. Ensure the enclosure has an equal gap around the tray.
Door Alignment	1. Ensure the Wall Profiles are completely vertical. 2. Ensure the Tray is completely level. 3. If the door is not aligned correctly, you have adjustment in the top wheel assemblies. 4. Rotate the Door Stop to prevent rocking.

Important Information to help you maintain your Product:

The following information is all you need to keep your product looking new.

Our products are generally maintenance free, however it may be necessary to lubricate wheel assemblies and other moving parts such has hinges from time to time.

Clean your product using a mild detergent diluted in water and then polished off using a soft cloth.
If you live in a hard water area, periodically clean your product using a 50/50 solution of white vinegar and water. The solution should be left on the enclosure for approximately 5 minutes then rinsed off using warm water. This method of cleaning should remove lime scale residue.
It is strongly recommended that a quality silicone spray is used.

A list of Donts

1. Don't use acidic based products which are unsuitable for cleaning enamel surfaces.
2. Don't use abrasive cleaners or cleaners using bleach or solvents, these products will adversely affect the finish of the aluminium profiles.
3. Don't use scouring pads, powder or any sharp instruments when cleaning the enclosure.