Sales Code: SBR102BV1 **Barcode:** 5056462603605 **Brand:** nuie **Description:** nuie Chrome Exposed Round Manual Bar Valve & Slide Rail Kit

Technical Drawing Not Available

Product Dimensions

Product	705 x 74mm (H x D)
Nett Weight	0.1 kg
Packaged Weight	0.1 kg

Product Details

Country of Origin	China
Product Material	Brass Abs
Control Type	Manual
Valve/Cartridge Type	1/4 Turn
Colour/Finish	Chrome
Style	Contemporary
Min Operating Pressure	0.2 Bar
Minimum Operation Pressure	0 Bar
No. Of Body Jets	0.0000
Valve / Cartridge Type	1/4 Turn

© ROXOR Group

Sales Code: BIN503 **Barcode:** 5056211898955 **Brand:** nuie **Description:** nuie Chrome Thermostatic Bar Shower Valve

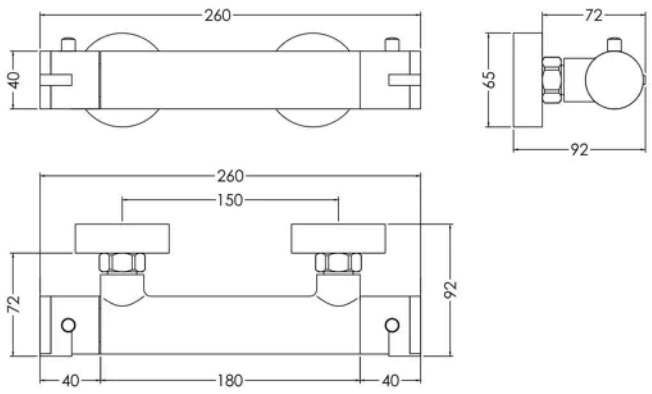

Product Dimensions

Product	55 x 275 x 72mm (H x W x D)
Packaged	50 x 98 x 315mm (H x W x D)
Outer Box	440 x 420 x 360mm (H x W x D)
Nett Weight	1.41 kg
Packaged Weight	1.41 kg

Packaging Details

Label Size (mm)	50 x 100
Label Colour	White
Label Qty	1.0000

Product Details

Country of Origin	China
Product Material	Brass Abs
Control Type	Manual
WRAS Approved	No
Valve/Cartridge Type	1/4 Turn
Colour/Finish	Chrome
Mount Type	Wall Hung
Style	Contemporary
Handle Type	Round
TMV2 Approved	No
TMV3 Approved	No
Pipe Centres	150
Handset Included	No
Head Included	No
Hose Included	No
Min Operating Pressure	0.2 Bar
Minimum Operation Pressure	0 Bar
No. Outlets	1.0000
Valve / Cartridge Type	1/4 Turn

© ROXOR Group

Sales Code: A3064 **Barcode:** 5055369044320 **Brand:** Hudson Reed **Description:** Hudson Reed Chrome Water Saving Shower Slide Rail Kit

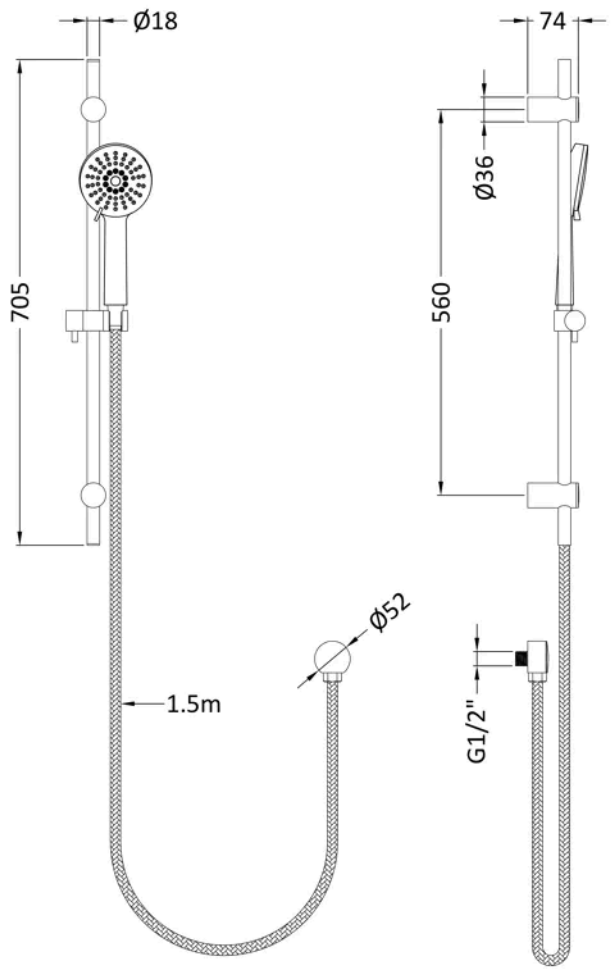

Product Dimensions

Product	705 x 74mm (H x D)
Packaged	95 x 154 x 725mm (H x W x D)
Outer Box	500 x 745 x 340mm (H x W x D)
Nett Weight	1.7 kg
Packaged Weight	1.7 kg

Packaging Details

Label Size (mm)	50 x 100
Label Colour	White
Label Qty	2.0000

Product Details

Country of Origin	United Kingdom
Product Material	Brass Abs
Control Type	Not Applicable
WRAS Approved	No
Colour/Finish	Chrome
Mount Type	Surface/Wall
Style	Contemporary
Easy Clean	Yes
TMV2 Approved	No
TMV3 Approved	No
Handset Included	Yes
Head Included	Yes
Hose Included	Yes
Hose Length	1500 mm
Min Operating Pressure	0.1 Bar
Minimum Operation Pressure	0 Bar
No. Outlets	1.0000
Outlet Elbow Supplied	Yes

© ROXOR Group