Sales Code: SBS29TW1

Barcode: 5056462601823

Brand: nuie

Description: nuie Contemporary Chrome Square Concealed Shower Kit With Single Function Handset & Outlet Elbow

Technical Drawing Not Available

Product Dimensions

Product	700 x 660 x 70mm (H x W x D)
Nett Weight	0.1 kg
Packaged Weight	0.1 kg

Product Details

Country of Origin	China
Product Material	Brass Abs
Control Type	Manual
Valve/Cartridge Type	1/4 Turn
Colour/Finish	Chrome
Style	Contemporary
Hose Length	1500 mm
Min Operating Pressure	0.1 Bar
Minimum Operation Pressure	0 Bar
No. Of Body Jets	0.0000
Valve / Cartridge Type	1/4 Turn

© ROXOR Group

Sales Code: JTY301 **Barcode:** 5055146188940 **Brand:** nuie **Description:** nuie Chrome Square Thermostatic Shower Valve

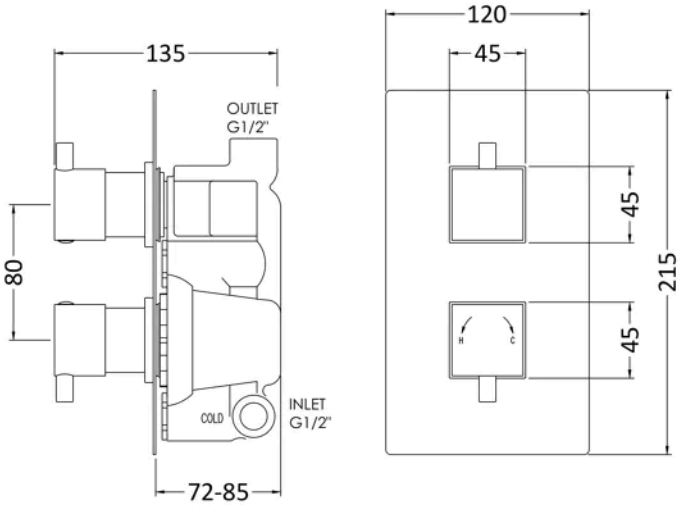

Product Dimensions

Product	215 x 120 x 133mm (H x W x D)
Packaged	110 x 240 x 250mm (H x W x D)
Outer Box	370 x 500 x 275mm (H x W x D)
Nett Weight	2.87 kg
Packaged Weight	2.87 kg

Packaging Details

Label Size (mm)	50 x 100
Label Colour	White
Label Qty	2.0000

Product Details

Country of Origin	United Kingdom
Product Material	Brass Abs
Control Type	Manual
WRAS Approved	Yes
Valve/Cartridge Type	1/4 Turn
Colour/Finish	Chrome
Mount Type	Recessed/Wall
Style	Contemporary
Handle Type	Lever/Square
TMV2 Approved	Yes
TMV3 Approved	No
Handset Included	No
Head Included	No
Min Operating Pressure	0.1 Bar
Minimum Operation Pressure	0 Bar
No. Outlets	1.0000
Outlet Elbow Supplied	No
Tmv2 Approval Number	2603035
Valve / Cartridge Type	1/4 Turn
Wras Approval No	250602040

© ROXOR Group

Sales Code: STY059 **Barcode:** 5055369015870 **Brand:** nuie **Description:** nuie Chrome Shower Slide Rail Kit

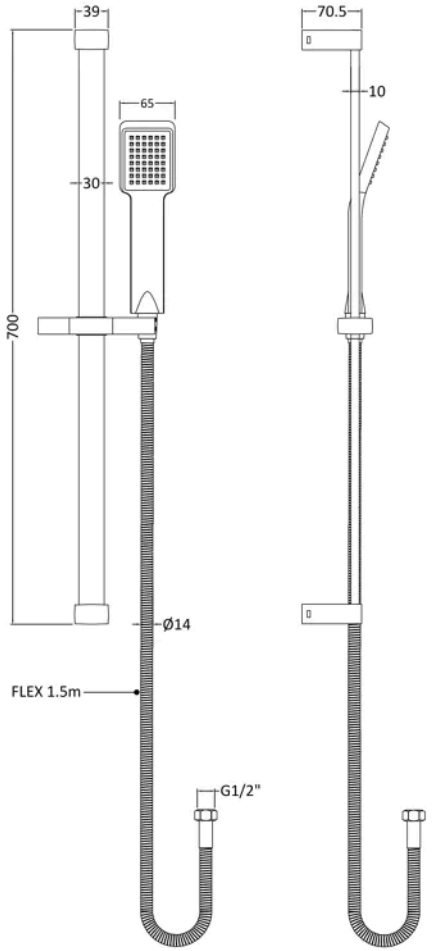

Product Dimensions

Product	700 x 660 x 70mm (H x W x D)
Packaged	50 x 153 x 668mm (H x W x D)
Nett Weight	0.9 kg
Packaged Weight	0.9 kg

Packaging Details

Label Size (mm)	50 x 100
Label Colour	White
Label Qty	2.0000

Product Details

Country of Origin	China
Product Material	Brass Abs
Control Type	Not Applicable
WRAS Approved	No
Colour/Finish	Chrome
Mount Type	Surface/Wall
Style	Contemporary
Easy Clean	Yes
TMV2 Approved	No
TMV3 Approved	No
Handset Included	Yes
Head Included	No
Hose Included	Yes
Hose Length	1500 mm
Min Operating Pressure	0.1 Bar
Minimum Operation Pressure	0 Bar
No. Outlets	1.0000
Outlet Elbow Supplied	No

© ROXOR Group

Sales Code: A3245 **Barcode:** 5055146169529 **Brand:** nuie **Description:** Chrome Shower Outlet Elbow Kit

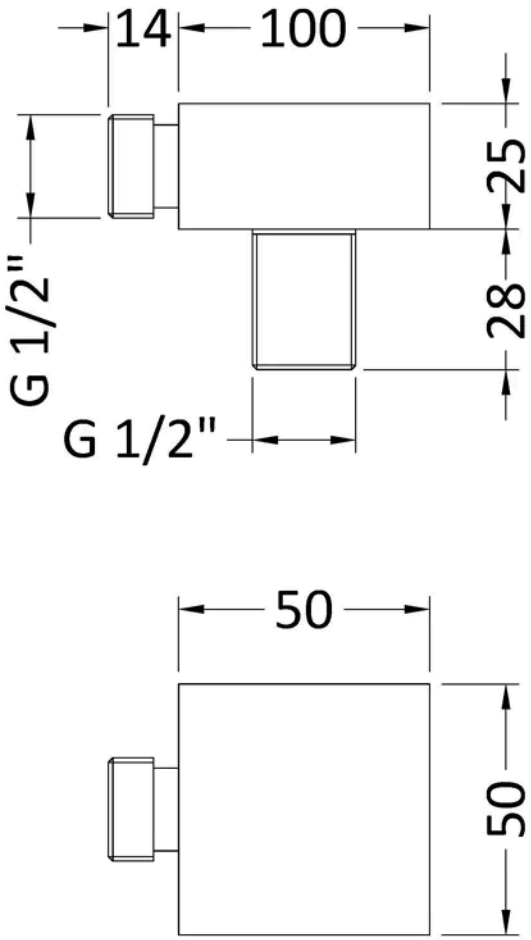

Product Dimensions	
Product	53 x 36 x 36mm (H x W x D)
Packaged	55 x 65 x 65mm (H x W x D)
Outer Box	305 x 355 x 355mm (H x W x D)
Nett Weight	0.24 kg
Packaged Weight	0.24 kg
Packaging Details	
Label Size (mm)	50 x 100
Label Colour	White
Label Qty	2.0000
Product Details	
Country of Origin	China
Product Material	Brass Abs
Colour/Finish	Chrome
Style	Contemporary

© ROXOR Group